VEKA INT EKO

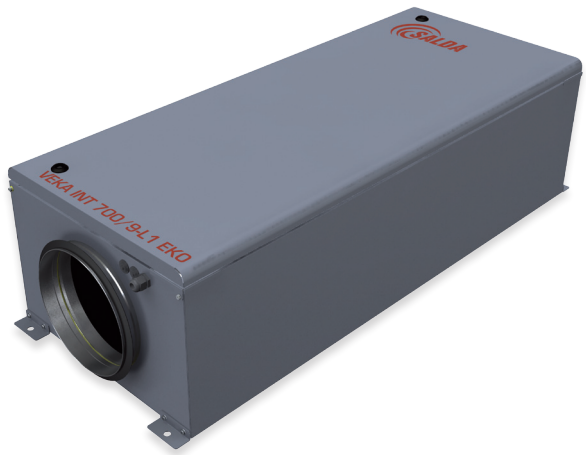

Application	Food production, Industrial premises, Warehouses, Sport facilities.
Description	VEKA INT EKO is a range of high-quality air supply units for premises with no need for recuperation. VEKA INT EKO units exceed ErP 2016 requirements and, together with other cost-saving solutions, provide the highest savings in their class. VEKA INT EKO units are light and can be mounted in all positions in the narrowest places. Units are suitable for various climate zones: each model has several electrical heater options and 1000+ models have water heater options. Air dampers are integrated to automatically shut down the air supply to the premises.
Controls	› Stouch › Flex
The main features	› 6 Models with different electrical heaters and water heaters. 25 options in total! › 6 mounting positions and service friendly. › Low height for installation under ceilings. › Modern automatic control. Integration with building management systems. › Cost-efficient solutions: high airtightness, efficient fans and filters.
Construction	› Powder-coated galvanized steel casing; › Acoustic and thermal insulation of external walls - 30 mm. › EC fan; › Integrated air damper with actuator. › Optional pressure switch for filter pollution. › Optional filters: G4, M5 or F7.

The company reserves the right to make changes of technical data without prior notice

VEKA INT 400 EKO
VEKA INT 700 EKO

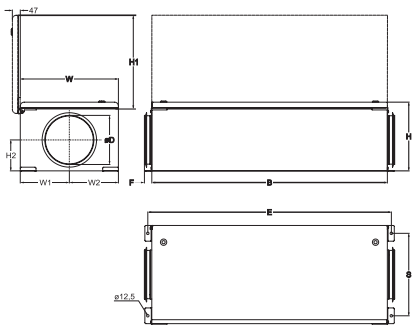

VEKA INT 1000 EKO
VEKA INT 2000 EKO
VEKA INT W 1000 EKO
VEKA INT W 2000 EKO

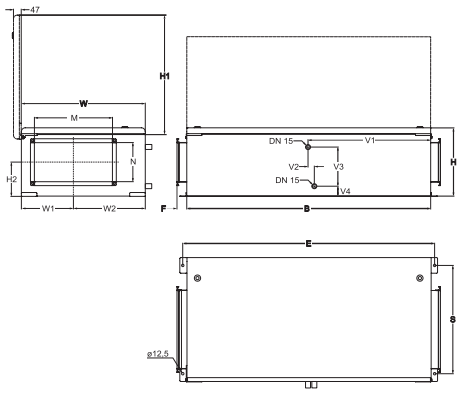

VEKA INT 3000 - 4000 EKO
VEKA INT W 3000 - 4000 EKO

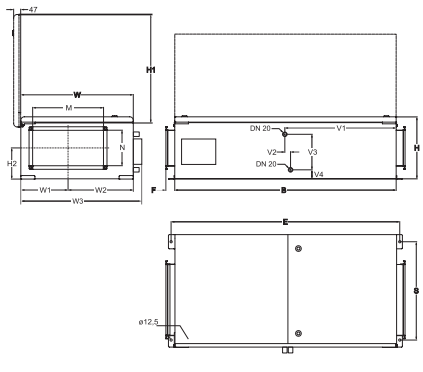

Unit	Dimensions [mm]																	
	W	W1	W2	W3	B	H	H1	H2	E	S	M	N	V1	V2	V3	V4	F	øD
VEKA INT 400 EKO	450	225	225	-	1130	325	427	157	1171	370	-	-	-	-	-	-	30	200
VEKA INT 700 EKO	500	250	250	-	1200	350	477	157	1241	420	-	-	-	-	-	-	40	250
VEKA INT 1000 EKO	635	267	368	-	1250	350	612	174	1291	555	400	200	-	-	-	-	50	-
VEKA INT 2000 EKO	750	316	434	-	1550	460	727	249	1591	670	500	250	-	-	-	-	50	-
VEKA INT 3000 EKO	950	417	533	1065	1700	550	826	268	1526	992	700	400	-	-	-	-	50	-
VEKA INT 4000 EKO	950	417	533	1065	1700	550	826	268	1526	992	700	400		-	-	-	50	-
VEKA INT W 1000 EKO	635	267	368	-	1250	350	612	174	1291	555	400	200	618	43	190	71	50	-
VEKA INT W 2000 EKO	750	316	434	-	1550	460	727	249	1591	670	500	250	740	42	297	73	50	-
VEKA INT W 3000 EKO	950	417	533	1065	1700	550	826	268	1526	992	700	400	845	38	360	78	50	-
VEKA INT W 4000 EKO	950	417	533	1065	1700	550	826	268	1526	992	700	400	845	38	360	78	50	-

Unit	Optional accessories									
	Stouch Flex	S-1141 S-RC02-F2 S-KFF-U	SKS	AKS AP	SSB *Heating*	SSB *Cooling*	RMG 80/60°C	RMG 60/40°C	VVP/VXP 80/60°C	VVP/VXP 60/40°C
VEKA INT400 EKO	+	+	-	200	-	81	-	-	-	-
VEKA INT 700 EKO	+	+	-	250	-	81	-	-	-	-
VEKA INT 1000 EKO	+	+	400x200	-	-	81	-	-	-	-
VEKA INT 2000 EKO	+	+	500x250	-	-	81	-	-	-	-
VEKA INT 3000 EKO	+	+	700x400	-	-	81	-	-	-	-
VEKA INT 4000 EKO	+	+	700x400	-	-	81	-	-	-	-
VEKA INT W 1000 EKO	+	+	400x200	-	61	81	3-1,6-4	3-1,0-4	45.10-1,6	45.10-1,0
VEKA INT W 2000 EKO	+	+	500x250	-	61	81	3-2,5-4	3-2,5-4	45.10-2,5	45.10-2,5
VEKA INT W 3000 EKO	+	+	700x400	-	61	81	+	+	+	+
VEKA INT W 4000 EKO	+	+	700x400	-	61	81	+	+	+	+

SSB 81-3 position.

Accessories

Control panel

FLEX **p. 177**

Sensor controller

Stouch **p. 176**

Pressure transmitter

S-1141 **p. 179**

CO2 sensors

S-RC02-F2 **p. 180**

Duct humidity sensor

S-KFF-U **p. 181**

Rectangular duct silencer

SKS **p. 215**

Circular duct silencer

AKS **p. 216**

Mounting clamp

AP **p. 219**

Thermic water valve actuator

SSB **p. 195**

Mixing point

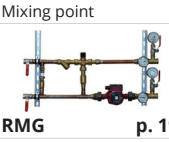

RMG **p. 196**

2 and 3 - way valves

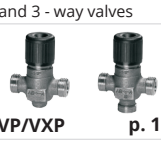

VVP/VXP **p. 197**

VEKA INT EKO

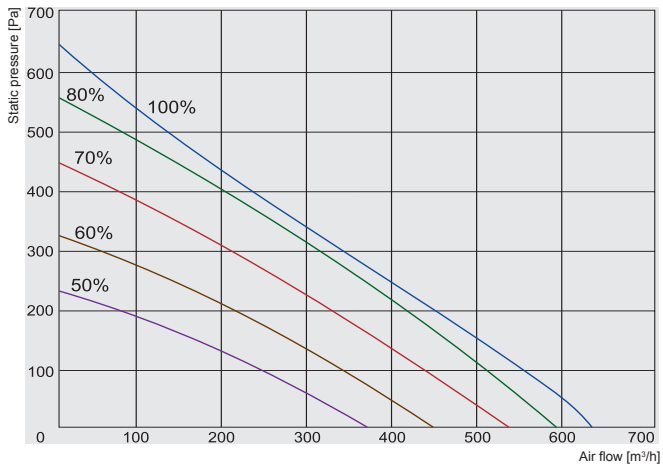

① **VEKA INT400/1,2-L1 EKO**

① **VEKA INT 400/2,0-L1 EKO**

① **VEKA INT 400/5,0-L1 EKO**

VEKA INT 400 EKO	Lwa total, dB(A)	LWA, dB(A) 125 Hz	250 Hz	500 Hz	1 kHz	2 kHz	4 kHz	8 kHz
Inlet	67	50	56	65	61	43	47	34
Outlet	74	56	62	73	62	63	57	40
Surrounding	53	37	41	51	45	38	37	24
Measured at 560 m³/h, 122 Pa								

			400/1,2-L1 EKO	400/2,0-L1 EKO	400/5,0-L1 EKO
Heater	-phase/voltage	[50Hz/VAC]	~1, 230	~1, 230	~2, 400
	-power consumption	[kW]	1,2	2,0	5,0
Fan	-phase/voltage	[50Hz/VAC]	~1, 230	~1, 230	~1, 230
	-current	[KW/A]	0,082/0,75	0,082/0,75	0,082/0,75
	-speed	[min⁻¹]	3200	3200	3200
	-protection class		IP-54	IP-54	IP-54
	-power consumption	[kW/A]	1,28/5,95	2,08/9,44	5,08/13,32
Automatic control integrated			integrated	integrated	integrated
Filter class			M5	M5	M5
Insulation of walls		[mm]	30	30	30
Weight		[kg]	36,0	36,0	37,0
Comply with ERP 2016; 2018			+	+	+

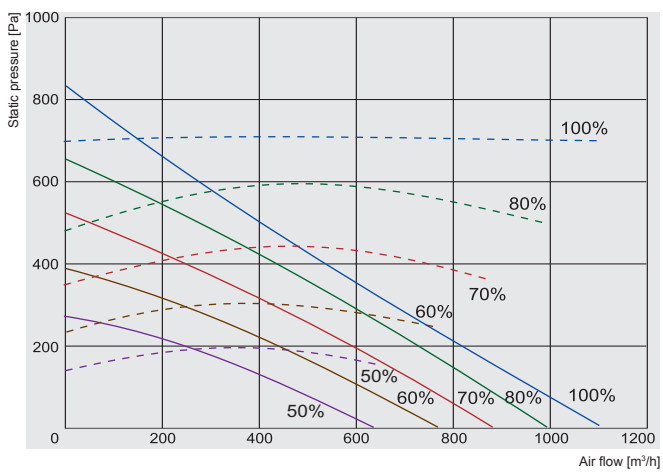

① **VEKA INT 700/2,4-L1 EKO**

① **VEKA INT 700/5,0-L1 EKO**

① **VEKA INT 700/9,0-L1 EKO**

VEKA INT 700 EKO	Lwa total, dB(A)	LWA, dB(A) 125 Hz	250 Hz	500 Hz	1 kHz	2 kHz	4 kHz	8 kHz
Inlet	69	50	59	61	65	64	54	52
Outlet	75	62	68	73	63	53	46	40
Surrounding	55	40	47	51	50	45	40	37
Measured at 838 m³/h, 162 Pa								

			700/2,4-L1 EKO	700/5,0-L1 EKO	700/9,0-L1 EKO
Heater	-phase/voltage	[50Hz/VAC]	~1, 230	~2, 400	~3, 400
	-power consumption	[kW]	2,4	5,0	9,0
Fan	-phase/voltage	[50Hz/VAC]	~1, 230	~1, 230	~1, 230
	-current	[KW/A]	0,358 /1,6	0,358 /1,6	0,358 /1,6
	-speed	[min⁻¹]	3380	3380	3380
	-protection class		IP-44	IP-44	IP-44
	-power consumption	[kW/A]	2,76 /12,03	5,36 /14,10	9,36 /14,60
Automatic control integrated			integrated	integrated	integrated
Filter class			M5	M5	M5
Insulation of walls		[mm]	30	30	30
Weight		[kg]	45,0	45,0	45,0
Comply with ERP 2016; 2018			+	+	+

The company reserves the right to make changes of technical data without prior notice

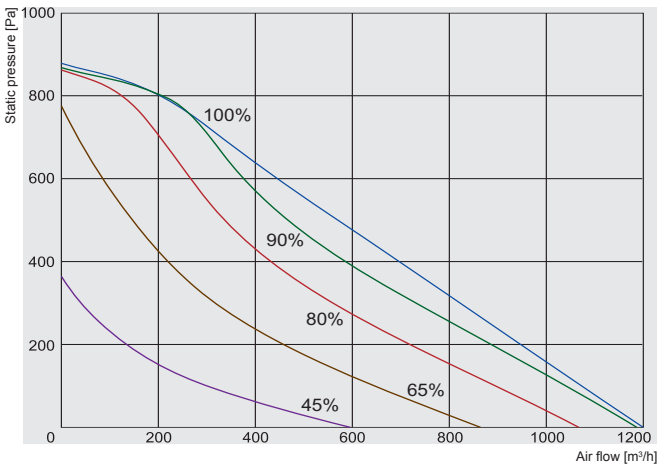

① **VEKA INT 1000/2,4-L1 EKO**
① **VEKA INT 1000/5,0-L1 EKO**
① **VEKA INT 1000/9,0-L1 EKO**
① **VEKA INT 1000/12,0-L1 EKO**

VEKA INT 1000 EKO	Lwa total, dB(A)	LWA, dB(A) 125 Hz	250 Hz	500 Hz	1 kHz	2 kHz	4 kHz	8 kHz
Inlet	69	53	56	65	63	61	59	53
Outlet	75	64	70	72	65	56	53	49
Surrounding	55	44	45	51	48	44	41	38
Measured at 1036 m³/h, 133 Pa								

			1000/2,4-L1 EKO	**1000/5,0-L1 EKO**	**1000/9,0-L1 EKO**	**1000/12,0-L1 EKO**
Heater	-phase/voltage	[50Hz/VAC]	~1, 230	~2, 400	~3, 400	~3, 400
	-power consumption	[kW]	2,4	5,0	9,0	12,0
Fan	-phase/voltage	[50Hz/VAC]	~1, 230	~1, 230	~1, 230	~1, 230
	-current	[KW/A]	0,233 /1,74	0,233 /1,74	0,358 /1,6	0,233/1,74
	-speed	[min⁻¹]	3220	3220	3220	3220
	-protection class		IP-44	IP-44	IP-44	IP-44
	-power consumption	[kW/A]	2,63 /12,17	5,23 /14,24	9,36 /14,60	12,23/19,06
Automatic control integrated			integrated	integrated	integrated	integrated
Filter class			M5	M5	M5	M5
Insulation of walls		[mm]	30	30	30	30
Weight		[kg]	56,0	56,0	57,0	57,0
Comply with ERP 2016; 2018			+	+	+	+

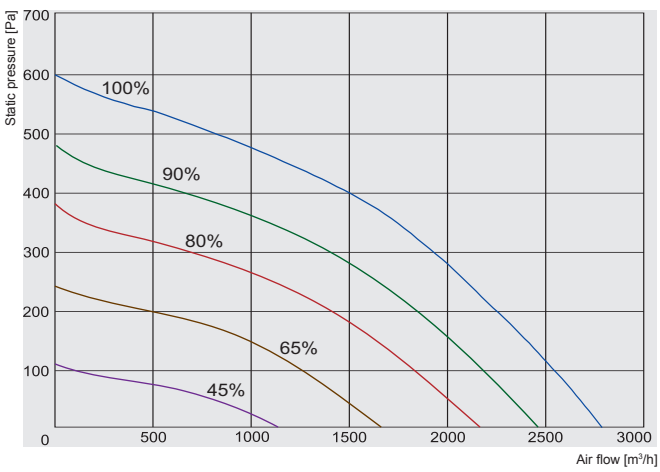

① **VEKA INT 2000/6,0-L1 EKO**
① **VEKA INT 2000/15,0-L1 EKO**
① **VEKA INT 2000/21,0-L1 EKO**

VEKA INT 2000 EKO	Lwa total, dB(A)	LWA, dB(A) 125 Hz	250 Hz	500 Hz	1 kHz	2 kHz	4 kHz	8 kHz
Inlet	80	71	78	72	57	61	59	55
Outlet	84	75	80	79	74	73	70	67
Surrounding	65	58	62	57	49	52	51	48
Measured at 2493 m³/h, 120 Pa								

			2000/6,0-L1 EKO	**2000/15,0-L1 EKO**	**2000/21,0-L1 EKO**
Heater	-phase/voltage	[50Hz/VAC]	~2, 400	~3, 400	~3, 400
	-power consumption	[kW]	6,0	15,0	21,0(12+9)
Fan	-phase/voltage	[50Hz/VAC]	~1, 230	~1, 230	~1, 230
	-current	[KW/A]	0,438/1,97	0,438/1,97	0,438 /1,97
	-speed	[min⁻¹]	2010	2010	2010
	-protection class		IP-44	IP-44	IP-44
	-power consumption	[kW/A]	6,44/16,97	15,44/23,62	21,44 /32,28
Automatic control integrated			integrated	integrated	integrated
Filter class			M5	M5	M5
Insulation of walls		[mm]	30	30	30
Weight		[kg]	88,0	88,5	89,0
Comply with ERP 2016; 2018			+	+	+

VEKA INT EKO

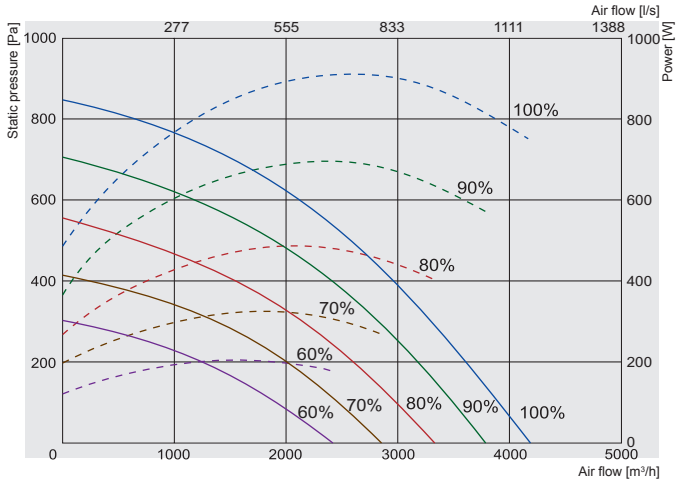

① VEKA INT 3000/15,0-L1 EKO
① VEKA INT 3000/21,0-L1 EKO
① VEKA INT 3000/30,0-L1 EKO
① VEKA INT 3000/39,0-L1 EKO

——— Performance
------- Power consumption

VEKA INT 3000 EKO	Lwa total, dB(A)	LWA, dB(A) 125 Hz	250 Hz	500 Hz	1 kHz	2 kHz	4 kHz	8 kHz
Inlet	75	57	66	72	68	66	65	62
Outlet	82	60	70	75	78	75	71	63
Surrounding	68	50	59	63	61	61	58	51
Measured at 3805 m³/h, 122 Pa								

			3000/15,0-L1 EKO	3000/21,0-L1 EKO	3000/30,0-L1 EKO	3000/39,0-L1 EKO
Heater	-phase/voltage	[50Hz/VAC]	~3, 400	~3, 400	~3, 400	~3, 400
	-power consumption	[kW]	15	21,0 (9+12)	30,0 (15+15)	39,0 (12+9+18)
Fan	-phase/voltage	[50Hz/VAC]	~1, 230	~1, 230	~1, 230	~1, 230
	-current	[KW/A]	0,920/4,2	0,920/4,2	0,920/4,2	0,920/4,2
	-speed	[min⁻¹]	2200	2200	2200	2200
	-protection class		IP-54	IP-54	IP-54	IP-54
	-power consumption	[kW/A]	15,92/25,80	21,92/35,20	30,92/47,20	39,92/60,20
Automatic control integrated			integrated	integrated	integrated	integrated
Filter class			M5	M5	M5	M5
Insulation of walls		[mm]	30	30	30	30
Weight		[kg]	137,0	138,0	140,0	142,0
Comply with ERP 2016; 2018			+	+	+	+

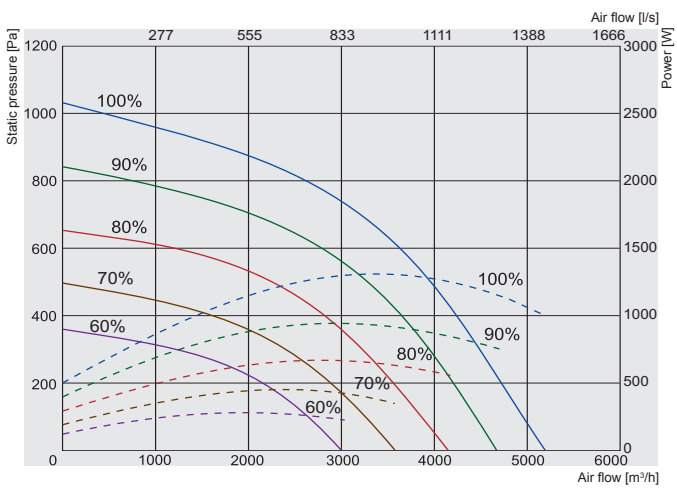

① VEKA INT4000/21-L1 EKO
① VEKA INT 4000/27-L1 EKO
① VEKA INT 4000/39-L1 EKO
① VEKA INT 4000/54-L1 EKO

——— Performance
------- Power consumption

VEKA INT 4000 EKO	Lwa total, dB(A)	LWA, dB(A) 125 Hz	250 Hz	500 Hz	1 kHz	2 kHz	4 kHz	8 kHz
Inlet	79	59	69	76	73	70	69	64
Outlet	86	61	73	79	83	79	76	69
Surrounding	72	52	62	67	66	65	63	55
Measured at 4857 m³/h, 142 Pa								

			4000/21-L1 EKO	4000/27-L1 EKO	4000/39-L1 EKO	4000/54-L1 EKO
Heater	-phase/voltage	[50Hz/VAC]	~3, 400	~3, 400	~3, 400	~3, 400
	-power consumption	[kW]	21,0	27,0	39,0	54,00
Fan	-phase/voltage	[50Hz/VAC]	~1, 230	~1, 230	~1, 230	~1, 230
	-current	[KW/A]	1,325 / 5,93	1,325 / 5,93	1,325 / 5,93	1,325 / 5,93
	-speed	[min⁻¹]	2390	2390	2390	2390
	-protection class		IP-54	IP-54	IP-54	IP-54
	-power consumption	[kW/A]	22,33/35,93	28,33/44,93	40,33/61,93	55,33/83,93
Automatic control integrated				integrated	integrated	integrated
Filter class			M5	M5	M5	M5
Insulation of walls		[mm]	30	30	30	30
Weight		[kg]	137,0	139,0	143,0	148,0
Comply with ERP 2016;2018			+	+	+	+

The company reserves the right to make changes of technical data without prior notice

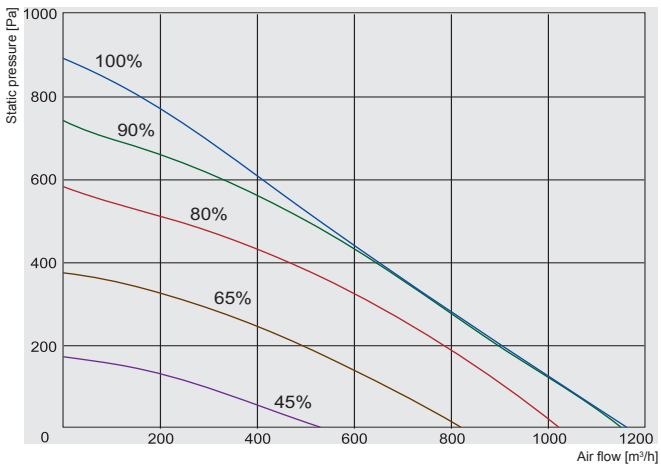

① VEKA INT W 1000/14,4-L1 EKO

VEKA INT W 1000 EKO	Lwa total, dB(A)	LWA, dB(A) 125 Hz	250 Hz	500 Hz	1 kHz	2 kHz	4 kHz	8 kHz
Inlet	70	55	50	66	62	60	61	57
Outlet	75	63	70	72	64	56	53	47
Surrounding	54	43	42	51	48	43	42	39
Measured at 1010 m³/h, 121 Pa								

			W-1000/14,4-L1 EKO
Water heater	-power	[kW]	14,4
	-water temp. T_{in}/T_{out}	[°C]	+80/+60
	-water flow rate	[l/s]	0,18
	-water pressure drop	[kPa]	4
	-kvs value	[m³/h]	3,26
Fan	-phase/voltage	[50Hz/VAC]	~1, 230
	-current	[kW/A]	0,232/1,77
	-speed	[min⁻¹]	3220
	-power consumption	[kW/A]	0,232/1,77
	-motor protection class		IP-44
Automatic control integrated			integrated
Filter class			M5
Insulation of wall		[mm]	30
Weight		[kg]	56,0
Comply with ERP 2016; 2018			+

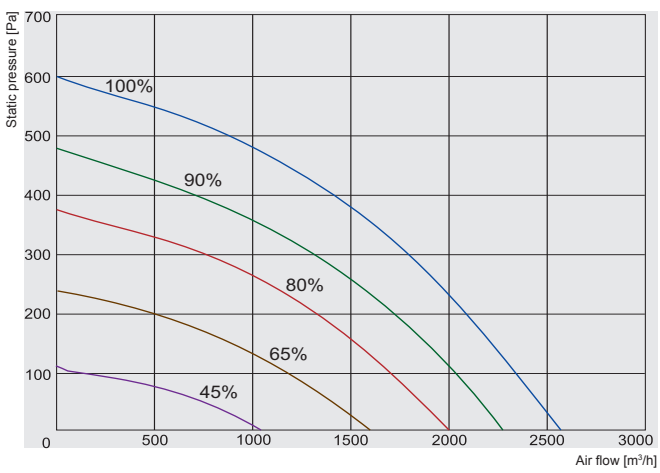

① VEKA INT W 2000/26,9-L1 EKO

VEKA INT W 2000 EKO	Lwa total, dB(A)	LWA, dB(A) 125 Hz	250 Hz	500 Hz	1 kHz	2 kHz	4 kHz	8 kHz
Inlet	78	72	75	72	63	59	52	49
Outlet	82	76	77	76	75	68	63	58
Surrounding	64	58	61	56	49	40	38	32
Measured at 2304 m³/h, 113 Pa								

			W-2000/26,9-L1 EKO
Water heater	-power	[kW]	26,9
	-water temp. T_{in}/T_{out}	[°C]	+80/+60
	-water flow rate	[l/s]	0,33
	-water pressure drop	[kPa]	18,1
	-kvs value	[m³/h]	2,81
Fan	-phase/voltage	[50Hz/VAC]	~1, 230
	-current	[kW/A]	0,481/2,18
	-speed	[min⁻¹]	2010
	-power consumption	[kW/A]	0,481/2,18
	-motor protection class		IP-44
Automatic control integrated			integrated
Filter class			M5
Insulation of wall		[mm]	30
Weight		[kg]	88,0
Comply with ERP 2016; 2018			+

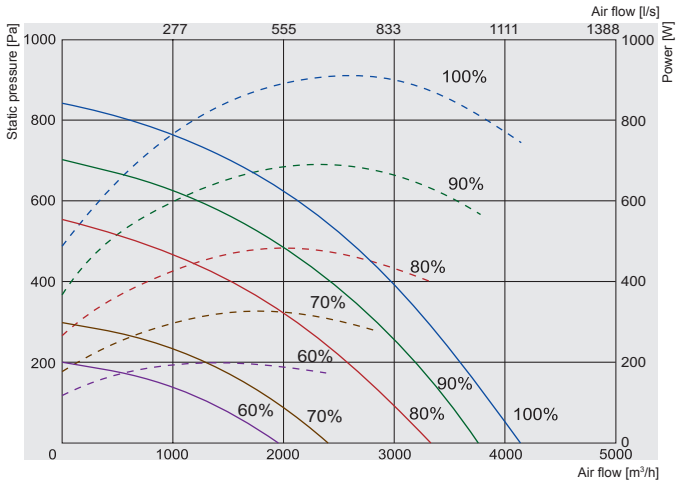

① VEKA INT W 3000/40,6-L1 EKO

——— Performance
------- Power consumption

VEKA INT W 3000 EKO	Lwa total, dB(A)	LWA, dB(A) 125 Hz	250 Hz	500 Hz	1 kHz	2 kHz	4 kHz	8 kHz
Inlet	75	57	65	71	68	66	65	62
Outlet	81	60	69	74	78	74	70	63
Surrounding	67	50	58	62	61	60	57	51
Measured at 3720 m³/h, 120 Pa								

			W-3000/40,6-L1 EKO
Water heater	-power	[kW]	40,6
	-water temp. T_{in}/T_{out}	[°C]	+80/+60
	-water flow rate	[l/s]	0,5
	-water pressure drop	[kPa]	9,6
	-kvs value	[m³/h]	5,86
Fan	-phase/voltage	[50Hz/VAC]	~1, 230
	-current	[kW/A]	0,93/4,15
	-speed	[min⁻¹]	2200
	-power consumption	[kW/A]	IP-54
	-motor protection class		0,93/4,15
Automatic control integrated			integrated
Filter class			M5
Insulation of wall		[mm]	30
Weight		[kg]	140,0
Comply with ERP 2016; 2018			+

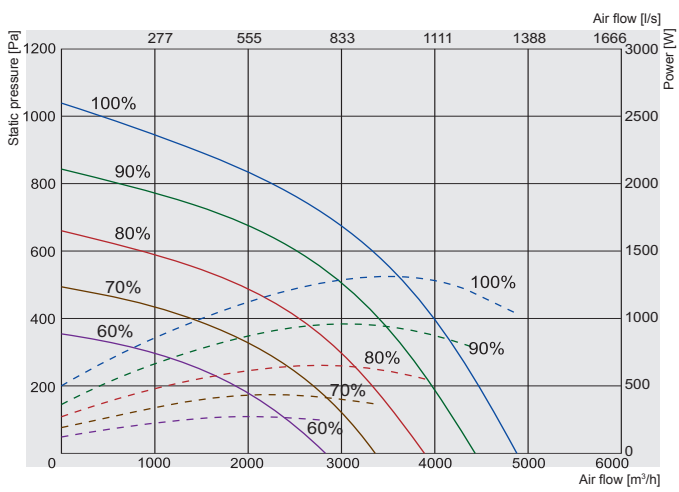

① VEKA INT W 4000/54-L1 EKO

——— Performance
------- Power consumption

VEKA INT W 4000 EKO	Lwa total, dB(A)	LWA, dB(A) 125 Hz	250 Hz	500 Hz	1 kHz	2 kHz	4 kHz	8 kHz
Inlet	78	59	69	74	72	70	69	62
Outlet	84	60	73	77	80	78	75	67
Surrounding	71	51	62	65	64	65	62	53
Measured at 4677 m³/h, 101 Pa								

			W-4000/54-L1 EKO
Water heater	-power	[kW]	56,95
	-water temp. T_{in}/T_{out}	[°C]	+80/+60
	-water flow rate	[l/s]	0,7
	-water pressure drop	[kPa]	12
	-kvs value	[m³/h]	7,33
Fan	-phase/voltage	[50Hz/VAC]	~1, 230
	-current	[kW/A]	1,258/5,8
	-speed	[min⁻¹]	2390
	-power consumption	[kW/A]	1,29/5,80
	-motor protection class		IP-54
Automatic control integrated			integrated
Filter class			M5
Insulation of wall		[mm]	30
Weight		[kg]	128,0
Comply with ERP 2016; 2018			+

The company reserves the right to make changes of technical data without prior notice

VEKA INT 400 EKO / 700 EKO / 1000 EKO / 2000 EKO / 3000 EKO / 4000 EKO versions with electrical heater (view from inspection side)

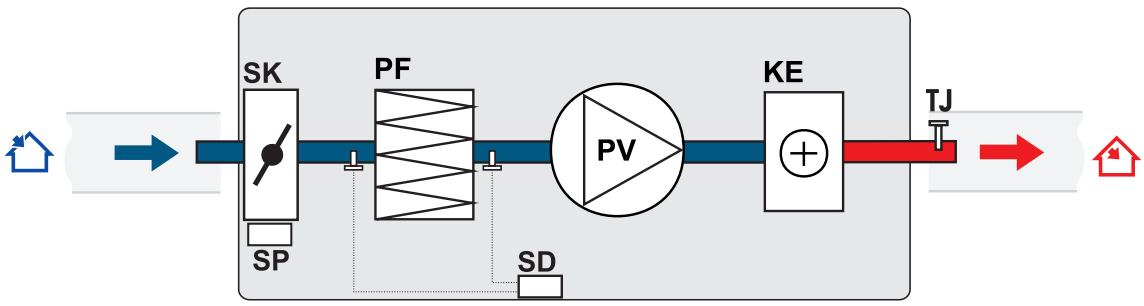

PV - supply air fan
PF - filter for supply air
KE - electrical heater
SK - air damper

SP - actuator
SD - differential pressure switch
TJ - supply air temperature sensor

VEKA INT W 1000 EKO / W 2000 EKO / W 3000 EKO / W 4000 EKO versions with water heater (view from inspection side)

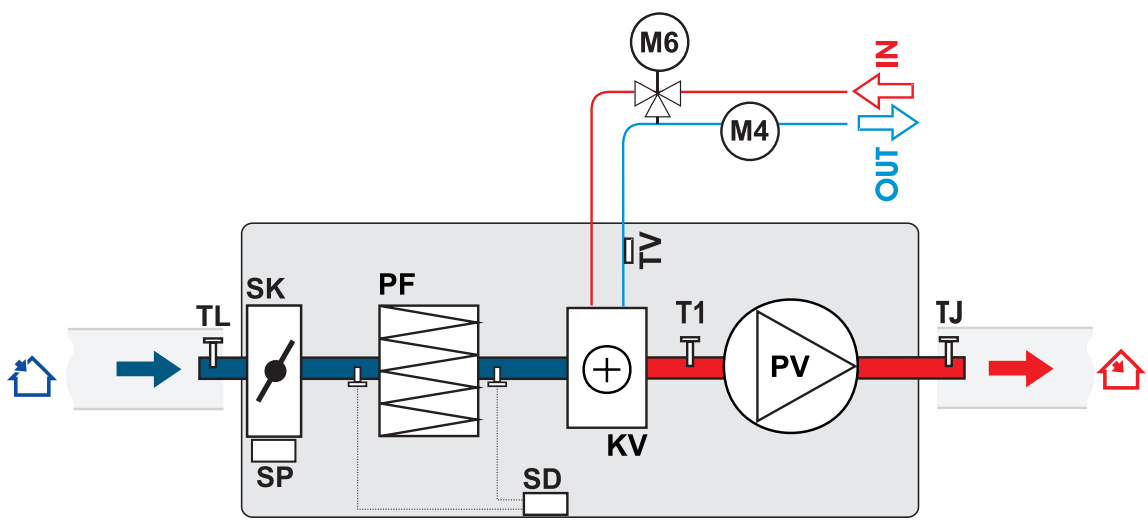

PV - supply air fan
PF - filter for supply air
KV - water heater
SK - air damper
SP - actuator
SD - differential pressure switch

TJ - supply air temperature sensor
TL - temperature sensor for fresh air
T1 - antifrost thermostat
TV - temperature sensor
M6 - optionally supply mixing valve and motor
M4 - water heater circulatory pump