RIS H EKO

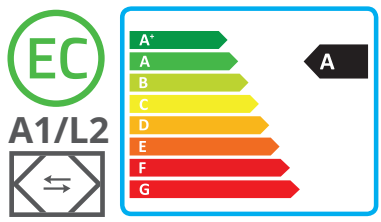

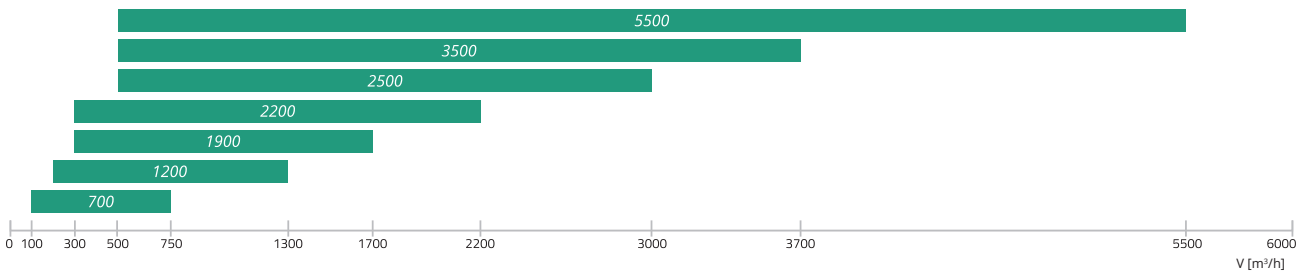

Application	Ventilation of houses, offices or other heated premises (classrooms, apartments, conference rooms, etc.)
Description	RIS H EKO 3.0 is a range of heat recovery units with high-efficiency counter-flow heat exchangers and horizontal duct connections. Units are designed for placement on the floor. Due to the horizontal ducting, there is a wide range of applications for outdoor placement. There are 7 sizes (airflow interval 700-5500 m³/h). RIS H EKO 3.0 units have high overall energy savings due to the highly efficient heat recovery (up to 90%), quiet and economical EC fans, effective low-pressure-drop filters and top-level of air tightness. Energy efficiency ensures full thermal comfort for passive houses, without an additional pre-heater at temperatures above -5°C. All the RIS H EKO 3.0 units are fully equipped with automatic controls. Optional external sensors for CO_2 and humidity and the event planning feature will help to control automatically your climate (demand-level control). RIS 1200-5500 H EKO 3.0 units have outdoor versions with roofing and outlet cover. RIS H EKO 3.0 units are service-friendly and are easy to mount. Filter pollution may be identified by timers or contamination controls (RIS 1200-5500 H EKO 3.0). All units are supplied tested and ready to install.
Remote control	Three* remote control options are available: 1. Flex, Stouch or Ptouch remote controllers. 2. Building management system connections. 3. Remote control via PC MB-Gateway. *RIS 1900-5500 H EKO 3.0 units can be optionally provided with SIEMENS Climatix controllers.
Features	› Outdoor versions. › Ready for Passive House technology: high efficiency. › Easy and quick mounting. › Water/electrical heating options. › Fully integrated plug-and-play control system.
Construction	› Construction from double-skinned steel, with powder coated paint, panels. › Acoustic and thermal wall insulation: RIS 700 H EKO 3.0 – 30 mm, RIS 1200-5500 H EKO 3.0 – 50 mm. › RIS 700 H EKO 3.0 powder-coated white housing RAL 9016; RIS 1200 – 5500 powder-coated grey housing RAL7040. › RIS 1900-5500 H EKO 3.0 optional roof and outlet covers for outdoor placement. › RIS 3500 H EKO 3.0 delivered in three sections and RIS 5500 H EKO 3.0 - in two sections. › Integrated electrical heater or optional duct-based water heater/cooler. › Low-pressure-drop filters: F7/M5. › Hinged door with locks grants easy access to internal components. › Separate compartment on the top of the unit grants quick access to the control board (plug-and-play). › Stainless steel condensate tray. › Fitted with mounting brackets (optional for RIS 700-1900 H EKO 3.0, RIS 2500-5500 H EKO 3.0 - included). › Integrated anti-frost pressure switch (RIS H 1200-5500 H EKO 3.0).

RIS 1200 H W EKO 3.0

- EKO → Equipped with new PRV V2 control board
- W → AHU with EC motors and efficient heat exchanger
- W → Heater type (E - integrated electrical heater; W - optional water heater)
- H → Housing type (V - vertical, H - horizontal, P - ceiling)
- 1200 → AHU size according to maximum airflow range m³/h
- RIS → AHU with plate heat exchanger

The company reserves the right to make changes of technical data without prior notice

RIS 700H EKO 3.0 - RIS 2200H EKO 3.0

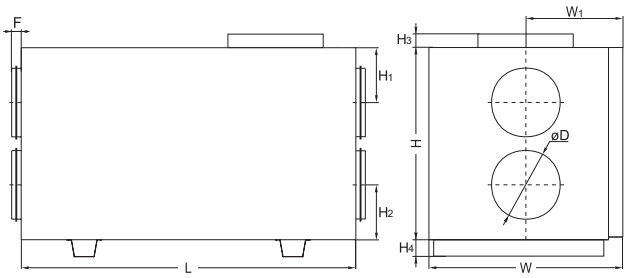

RIS 3500H EKO 3.0

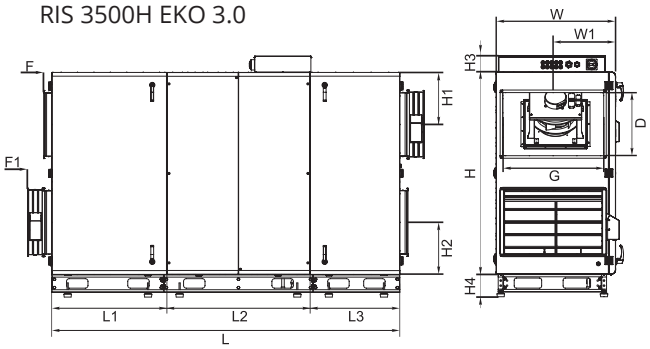

RIS 2500H EKO 3.0

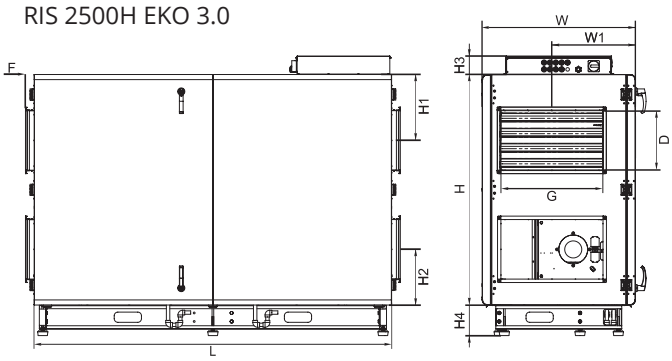

RIS 5500H EKO 3.0

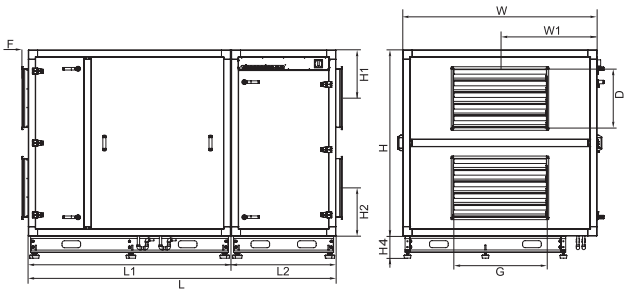

	Dimensions [mm]															
Unit	**L**	**L_1**	**L_2**	**L_3**	**W**	**W_1**	**øD**	**G**	**D**	**H**	**H_1**	**H_2**	**H_3**	**H_4**	**F**	**F_1**
RIS 700HE/HW EKO 3.0	1200	-	-	-	670	335	250	-	-	780	210	210	65	126	40	-
RIS 1200HE/HW EKO 3.0	1500	-	-	-	760	380	315	-	-	1000	269	269	70	141	40	-
RIS 1900HE/HW EKO 3.0	1800	-	-	-	800	400	400	-	-	1245	331	331	106	141	70	-
RIS 2200HE/HW EKO 3.0	1800	-	-	-	800	400	400	-	-	1245	331	331	106	141	70	-
RIS 2500HE/HW EKO 3.0	2100	-	-	-	900	490	-	600	350	1355	387	327	108	180	50	-
RIS 3500HE/HW EKO 3.0	2756	909	1132	709	946	494	-	800	500	1600	413	413	129	180	65	192
RIS 5500HE/HW EKO 3.0	2644	1740	900	-	1670	835	-	800	500	1600	415	415	-	180	55	-

Accessories

Remote controller

Ptouch p. 175

Control panel

FLEX p. 177

Remote controller

Stouch p. 176

Net module

MB-Gateway p. 178

Shut-off damper

SKG p. 212

Pressure transmitter

S-1141 p. 179

CO2 sensor

S-RC02-F2 p. 180

Humidity sensor

S-KFF-U p. 181

Thermic water valve actuator

SSB p. 195

Actuator for dampers

SP p. 210

Circular duct silencer

AKS p. 216

Mounting clamp

AP p. 219

Heating coil

AVS p. 185

Electrical duct pre-heater

EKS NV PH p. 203

Electrical duct pre-heater

EKA NV PH p. 201

Circular duct water cooler

AVA p. 193

Water heater coil

SVS p. 190

Mixing point

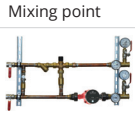

RMG p. 196

2 and 3 way valves

VVP/VXP p. 197

Comfort Box

CB p. 183

Rectangular duct silencer

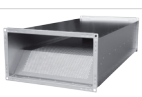

SKS p. 215

Outlet cover

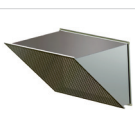

Roof

RIS H EKO

Unit	Optional accessories								
	Ptouch Stouch Flex MB-Gateway	S-1141 S-RC02-F2 S-KFF-U	AKS SKG AP	SKS SVS	EKS NV PH	AVA AVS	EKA NV PH	SP *Supply*	SP *Exhaust*
RIS 700HE EKO 3.0	+	+	250	-	-	250	250	CM230-1-F-L	
RIS 700HW EKO 3.0	+	+	250	-	-	250	250	TF230	CM230-1-F-L
RIS 1200HE EKO 3.0	+	+	315	-	-	315	315	LM230A-TP	
RIS 1200HW EKO 3.0	+	+	315	-	-	315	315	LF230	LM230A-TP
RIS 1900HE EKO 3.0	+	+	400	-	-	400	400	SM230A-TP	
RIS 1900HW EKO 3.0	+	+	400	-	-	400	400	NF230	SM230A-TP
RIS 2200HW EKO 3.0	+	+	400	-	-	400	400	SM230A-TP	
RIS 2200HE EKO 3.0	+	+	400	-	-	400	400	NF230	SM230A-TP
RIS 2500HE EKO 3.0	+	+	-	600x350	600x350	-	-	int	
RIS 2500HW EKO 3.0	+	+	-	600x350	600x350	-	-	int	
RIS 3500HE EKO 3.0	+	+	-	800x500	800x500	-	-	int	
RIS 3500HW EKO 3.0	+	+	-	800x500	800x500	-	-	int	
RIS 5500HE EKO 3.0	+	+	-	800x500	800x500	-	-	int	
RIS 5500HW EKO 3.0	+	+	-	800x500	800x500	-	-	int	

Unit	Optional accessories							
	SSB *Heating*	SSB *Cooling*	RMG 80/60°C	RMG 60/40°C	VVP/VXP 80/60°C	VVP/VXP 60/40°C	Comfort Box	Roof Outlet cover
RIS 700HE EKO 3.0	-	81	-	-	-	-	-	-
RIS 700HW EKO 3.0	61	81	3-1,0-4	3-0,63-4	45.10-1,1	45.10-0,63	-	-
RIS 1200HE EKO 3.0	-	81	-	-	-	-	-	-
RIS 1200HW EKO 3.0	61	81	3-0,63-4	3-0,63-4	45.10-0,63	45.10-0,63	-	-
RIS 1900HE EKO 3.0	-	81	Heaters, coolers and RMG/VVP/VXP data online selection program: ***www.salda.lt***				400	+
RIS 1900HW EKO 3.0	61	81					400	+
RIS 2200HE EKO 3.0	-	81					400	+
RIS 2200HW EKO 3.0	61	81					400	+
RIS 2500HE EKO 3.0	-	-					600x350	+
RIS 2500HW EKO 3.0	61	-					600x350	+
RIS 3500HE EKO 3.0	-	-					800x500	+
RIS 3500HW EKO 3.0	61	-					800x500	+
RIS 5500HE EKO 3.0	-	-					800x500	+
RIS 5500HW EKO 3.0	61	-					800x500	+

The company reserves the right to make changes of technical data without prior notice

RIS 700H EKO 3.0

——— Performance
------- Power consumption

Supply air

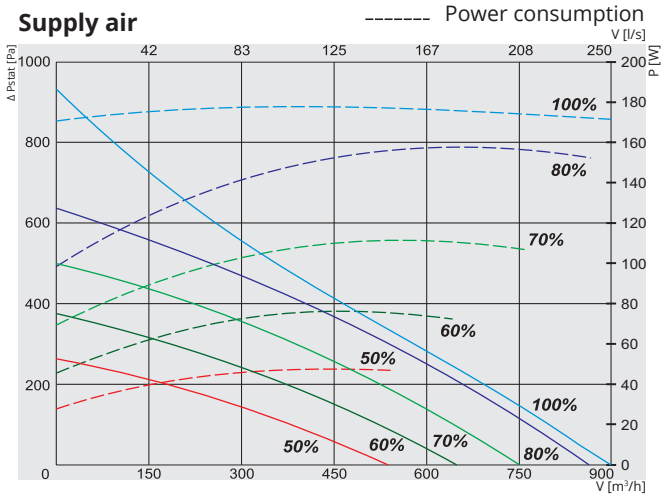

Exhaust air

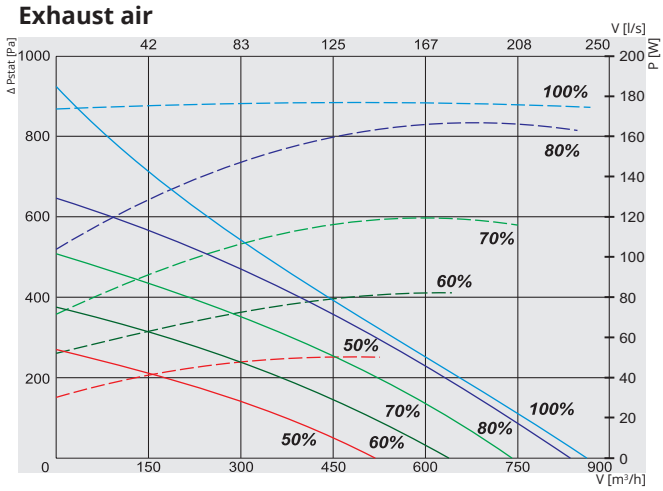

Specific fan power

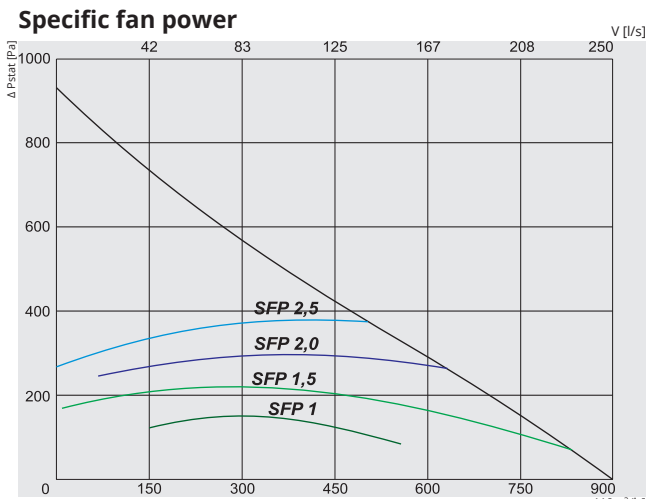

$$SFP = \frac{\text{total power for supply \& exhaust fans kW}}{\text{air flow m}^3\text{/h}} \times 3600$$

Temperature efficiency

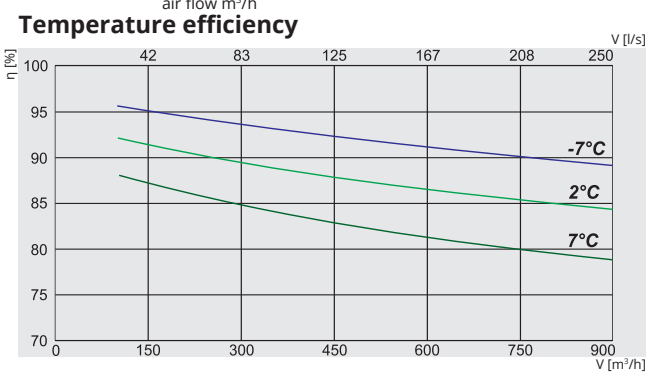

RIS 700H EKO 3.0 *(convertible)* ver.

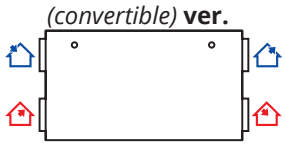

View from inspection side

Exhaust air | Extract air | outdoor air | Supply air

Article No.		Version
GAGRIS1791_0036A	700HE EKO 3.0	Integrated electrical heater
GAGRIS1972_0037A	700HW EKO 3.0	Optional water heater

			700HE / HW EKO 3.0	
Water heater (optional) HW ver.				AVS 250
Electrical heater HE ver.	phase/voltage	[50Hz/VAC]		~1, 230
		[kW]		1,2
EC fans	phase/voltage	[50Hz/VAC]		~1, 230
exhaust	power/current	[kW/A]		0,168/1,4
	fan speed	[min⁻¹]		3230
supply	power/current	[kW/A]		0,168/1,4
	fan speed	[min⁻¹]		3230
Thermal efficiency up to*				90%
Motorized by-pass				+
Max power consumption HE/HW		[kW/A]	1,54/8,02	0,34/2,80
Control board				PRV V2
Filter class	exhaust/supply			M5/M5
Housing insulation, mineral wool		[mm]		30
Colour	RAL	white		9016
Weight (net, without packing)		[kg]	111	110
Comply with ERP				2016; 2018
Operation				indoors
Fresh air temperature limits**		°C		-5 - +40
Housing protection class	IP			34

* Calculated according EN 13141-7.
**For temperatures lower than recommended, use electrical pre-heater to ensure balanced operation.

Temperature efficiency (balanced mass flow) EN 13141-7:
Extract air = 20°C/60%RH
Outdoor air = -7°C / 2°C / 7°C

700HE EKO 3.0	Lwa total, dB(A)	LWA, dB(A) 125 Hz	250 Hz	500 Hz	1 kHz	2 kHz	4 kHz	8 kHz
Supply	73	65	67	65	64	66	63	54
Extract	61	54	55	57	49	46	41	40
Surrounding	56	45	49	54	45	43	40	37
Measured at 760 m³/h, 101 Pa								

Certifications

EUROVENT certified
heat exchanger performance

EUROVENT CERTIFIED PERFORMANCE
www.eurovent-certification.com

AIR HANDLING UNITS

RIS H EKO

RIS 1200H EKO 3.0

——— Performance
------- Power consumption

Supply air

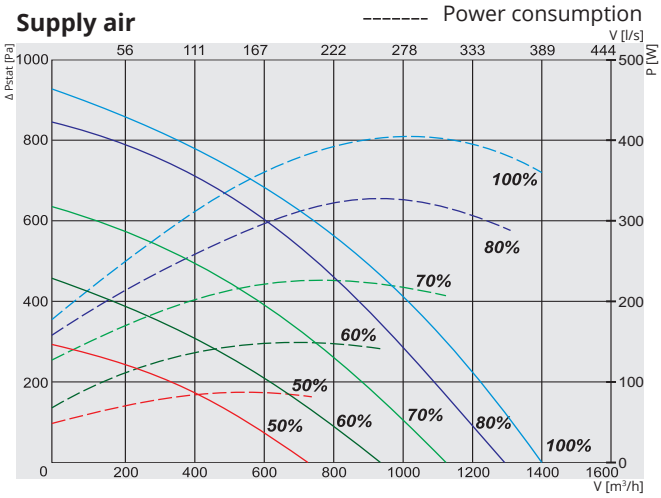

Exhaust air

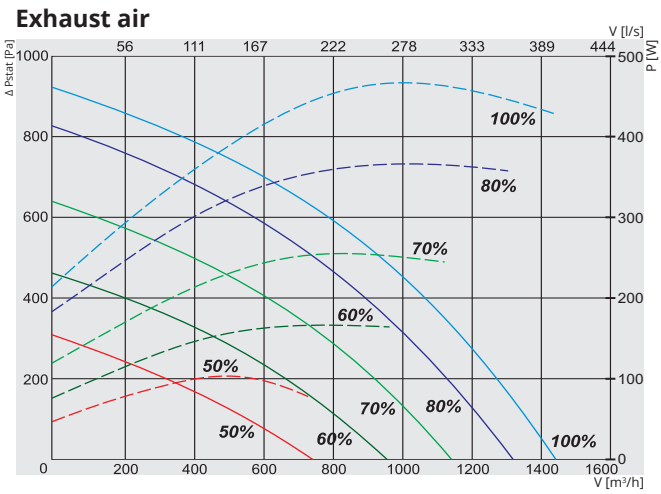

Specific fan power

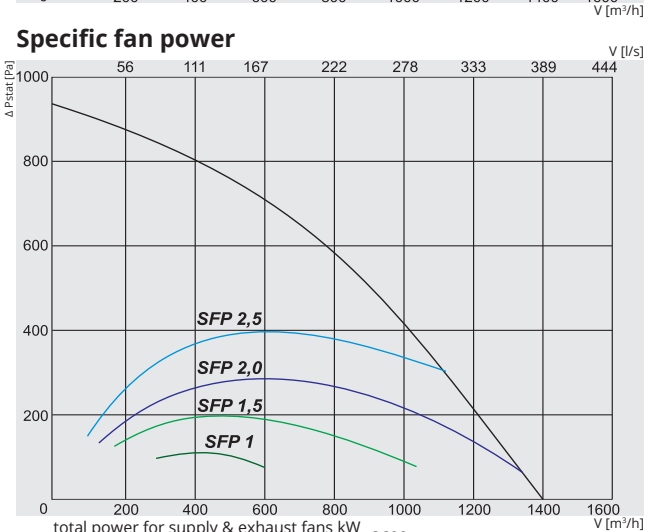

$$SFP = \frac{\text{total power for supply \& exhaust fans kW}}{\text{air flow m}^3\text{/h}} \times 3600$$

Temperature efficiency

RIS 1200H EKO 3.0
(convertible) **ver.**

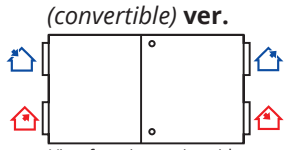

View from inspection side

Exhaust air | Extract air | Outdoor air | Supply air

Article No.		Version
GAGRIS1740_0006A	1200HE EKO 3.0	Integrated electrical heater
GAGRIS1767_0030A	1200HW EKO 3.0	Optional water heater

1200HE / HW EKO 3.0				
Water heater (optional) HW ver.				AVS 315
Electrical heater HE ver.	phase/voltage	[50Hz/VAC]		~1, 230
		[kW]		2,0
EC fans	phase/voltage	[50Hz/VAC]		~1, 230
exhaust	power/current	[kW/A]		0,4/2,61
	fan speed	[min⁻¹]		3400
supply	power/current	[kW/A]		0,42/2,72
	fan speed	[min⁻¹]		3400
Thermal efficiency up to*				90%
Motorized by-pass				+
Max power consumption HE/HW		[kW/A]	2,82/14,07	0,82 /5,37
Control board				PRV V2
Filter class	exhaust/supply			M5/F7
Housing insulation, mineral wool		[mm]		50
Colour	RAL	grey		7040
Weight (net, without packing) HE/HW		[kg]	171	173
Comply with ERP				2016; 2018
Operation				indoors/outdoors***
Fresh air temperature limits**		°C		-5 - +40
Housing protection class	IP			34

* Calculated wet efficiency.
**For temperatures lower than recommended, use electrical pre-heater to ensure balanced operation.
***With proper roof mounted.

Temperature efficiency (balanced mass flow) :
Extract air = 20°C/60%RH
Outdoor air = -7°C / 2°C / 7°C

1200H EKO 3.0	Lwa total, dB(A)	LWA, dB(A) 125 Hz	250 Hz	500 Hz	1 kHz	2 kHz	4 kHz	8 kHz
Supply	75	62	65	71	70	65	63	53
Extract	57	51	49	52	51	45	40	32
Surrounding	53	44	43	48	47	43	40	33
Measured at 1271 m³/h, 119 Pa								

Certifications

EUROVENT certified
heat exchanger performance

EUROVENT CERTIFIED PERFORMANCE
www.eurovent-certification.com

The company reserves the right to make changes of technical data without prior notice

RIS 1900H EKO 3.0

——— Performance
------- Power consumption

Supply air

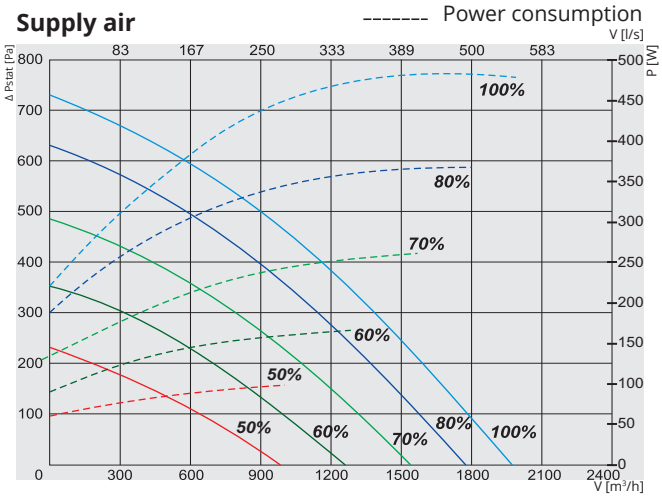

Exhaust air

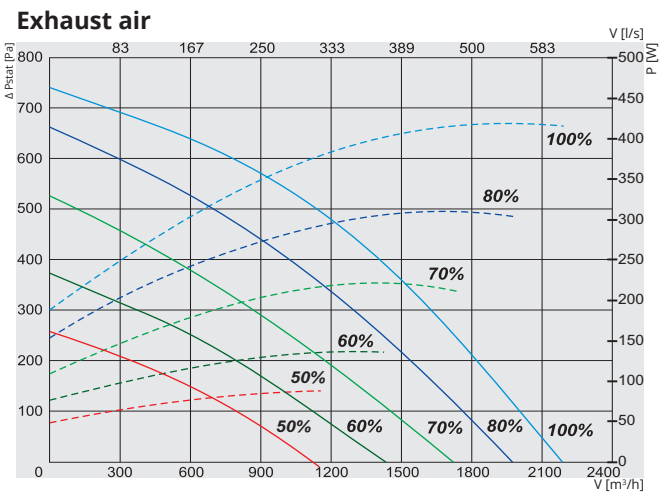

Specific fan power

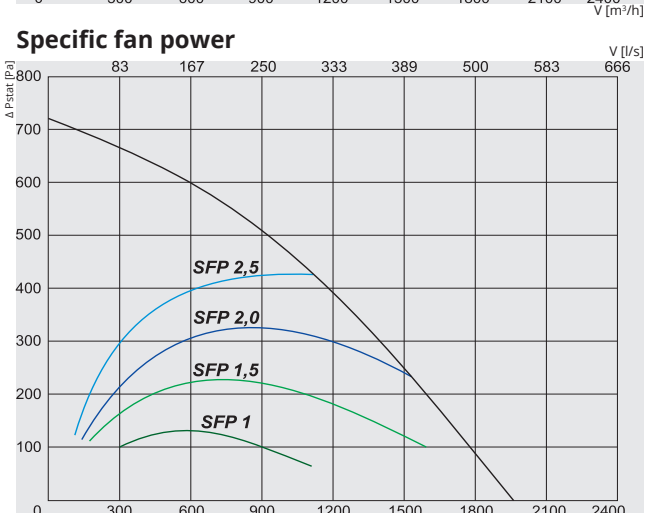

$$SFP = \frac{\text{total power for supply \& exhaust fans kW}}{\text{air flow m}^3\text{/h}} \times 3600$$

Temperature efficiency

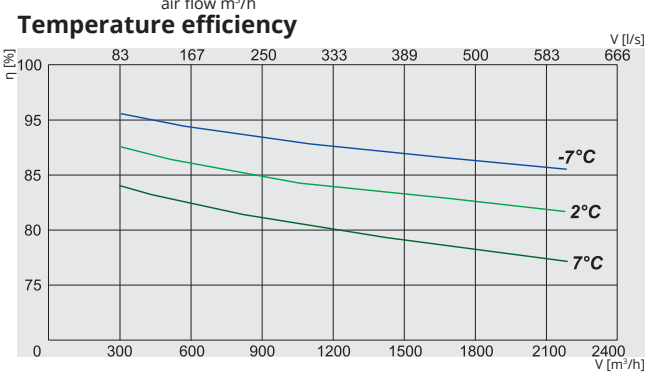

RIS 1900HE EKO 3.0
(convertible) **ver.**

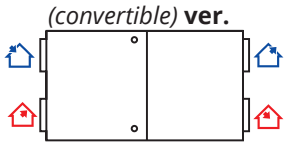

View from inspection side

Exhaust air | Extract air | Outdoor air | Supply air

Article No.		Version
GAGRIS1789_0046A	1900HE EKO 3.0	Integrated electrical heater
GAGRIS1790_0047A	1900HW EKO 3.0	Optional water heater

			1900HE / HW EKO 3.0	
Water heater (optional) HW ver.			AVS / Comfort Box 400	
Electrical heater HE ver.	phase/voltage	[50Hz/VAC]	~1, 230	
		[kW]	3,0	
EC fans	phase/voltage	[50Hz/VAC]	~1, 230	
exhaust	power/current	[kW/A]	0,48/3,1	
	fan speed	[min⁻¹]	2540	
supply	power/current	[kW/A]	0,505/3,2	
	fan speed	[min⁻¹]	2540	
Thermal efficiency up to*			90%	
Motorized by-pass			+	
Max power consumption HE/HW		[kW/A]	3,99 /19,32	0,99/6,32
Control board			PRV V2	
Filter class	exhaust/supply		M5/F7	
Housing insulation, mineral wool		[mm]	50	
Colour	RAL	grey	7040	
Weight (net, without packing)		[kg]	252	251
Comply with ERP			2016; 2018	
Operation			indoors/outdoors***	
Fresh air temperature limits**		°C	-5 - +40	
Housing protection class	IP		34	

* Calculated wet efficiency.
**For temperatures lower than recommended, use electrical pre-heater to ensure balanced operation.
***With proper roof mounted.

Temperature efficiency (balanced mass flow) :
Extract air = 20°C/60%RH
Outdoor air = -7°C / 2°C / 7°C

1900H EKO 3.0	Lwa total, dB(A)	LWA, dB(A) 125 Hz	250 Hz	500 Hz	1 kHz	2 kHz	4 kHz	8 kHz
Supply	78	58	71	72	73	71	65	62
Extract	67	49	58	60	59	58	57	44
Surrounding	60	41	51	55	53	52	49	42
Measured at 2016 m³/h, 100 Pa								

Certifications

EUROVENT certified
heat exchanger performance

EUROVENT CERTIFIED PERFORMANCE
www.eurovent-certification.com

AIR HANDLING UNITS

RIS H EKO

RIS 2200H EKO 3.0

——— Performance
------- Power consumption

Supply air

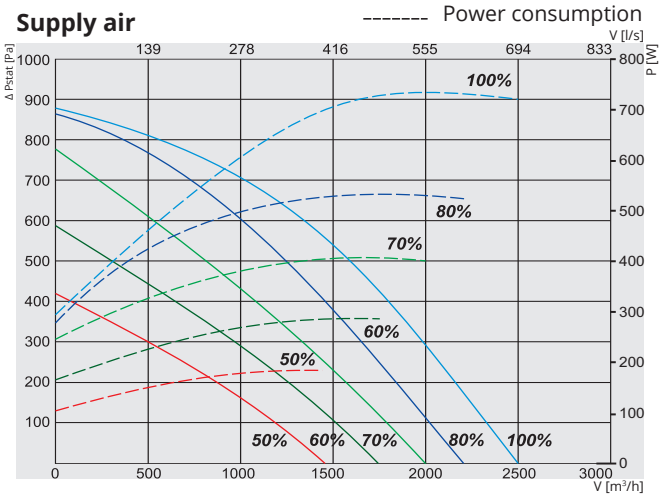

Exhaust air

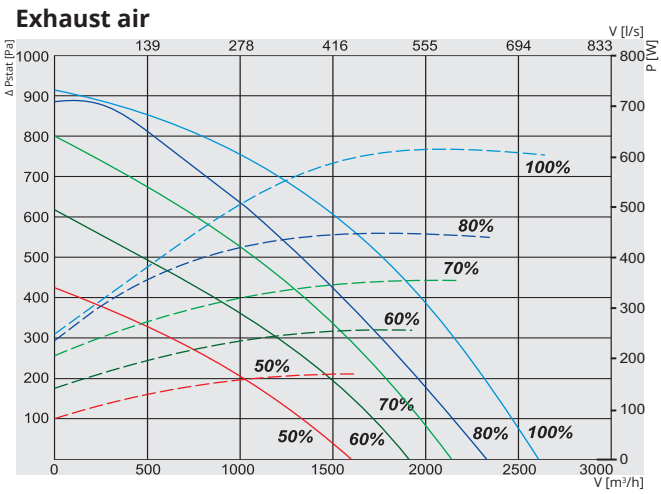

Specific fan power

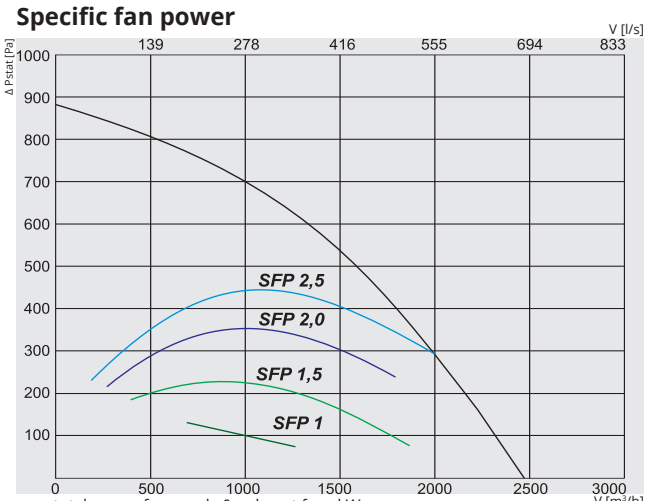

$$SFP = \frac{\text{total power for supply \& exhaust fans kW}}{\text{air flow m}^3\text{/h}} \times 3600$$

Temperature efficiency

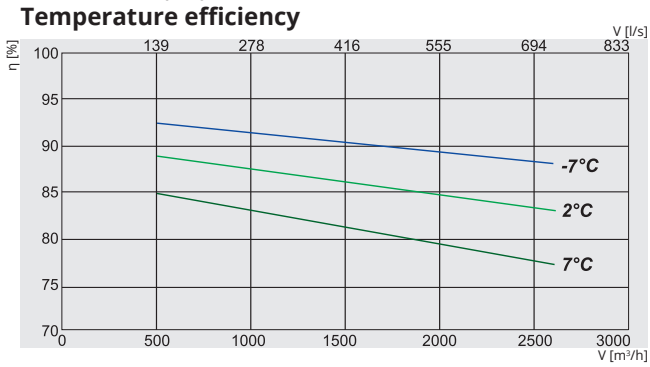

NEW!

RIS 2200H EKO 3.0
(convertible) **ver.**

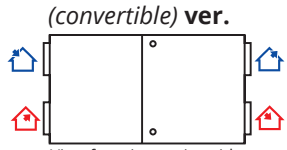

View from inspection side

Exhaust air | Extract air | Outdoor air | Supply air

Article No.		Version
GAGRIS1970_0151A	2200HE EKO 3.0	Integrated electrical heater
GAGRIS1971_0153A	2200HW EKO 3.0	Optional water heater

2200HE / HW EKO 3.0				
Water heater (optional) HW ver.				AVS / Comfort Box 400
Electrical heater HE ver.	phase/voltage	[50Hz/VAC]		~1, 230
		[kW]		3,0
EC fans	phase/voltage	[50Hz/VAC]		~1, 230
exhaust	power/current	[kW/A]		0,72/3,1
	fan speed	[min⁻¹]		2800
supply	power/current	[kW/A]		0,72/3,1
	fan speed	[min⁻¹]		2800
Thermal efficiency up to*				90%
Motorized by-pass				+
Max power consumption HE/HW		[kW/A]	4,44/19,20	1,44/6,22
Control board				PRV V2
Filter class	exhaust/supply			M5/F7
Housing insulation, mineral wool		[mm]		50
Colour	RAL	grey		7040
Weight (net, without packing) HE/HW		[kg]	252	250
Comply with ERP				2016; 2018
Operation				indoors/outdoors***
Fresh air temperature limits**		°C		-5 - +40
Housing protection class	IP			34

* Calculated wet efficiency.
**For temperatures lower than recommended, use electrical pre-heater to ensure balanced operation.
***With proper roof mounted

Temperature efficiency (balanced mass flow) :
Extract air = 20°C/60%RH
Outdoor air = -7°C / 2°C / 7°C

2200H EKO 3.0	Lwa total, dB(A)	LWA, dB(A) 63 Hz	125 Hz	250 Hz	500 Hz	1 kHz	2 kHz	4 kHz	8 kHz
Supply	79	63	64	68	70	73	74	68	63
Extract	70	60	58	62	65	63	61	59	51
Surrounding	62	43	48	57	56	54	52	48	44
Measured at 2070 m³/h, 250 Pa									

Certifications

EUROVENT certified
heat exchanger performance

EUROVENT CERTIFIED PERFORMANCE
www.eurovent-certification.com

The company reserves the right to make changes of technical data without prior notice

RIS 2500H EKO 3.0

Performance
Power consumption

Supply air

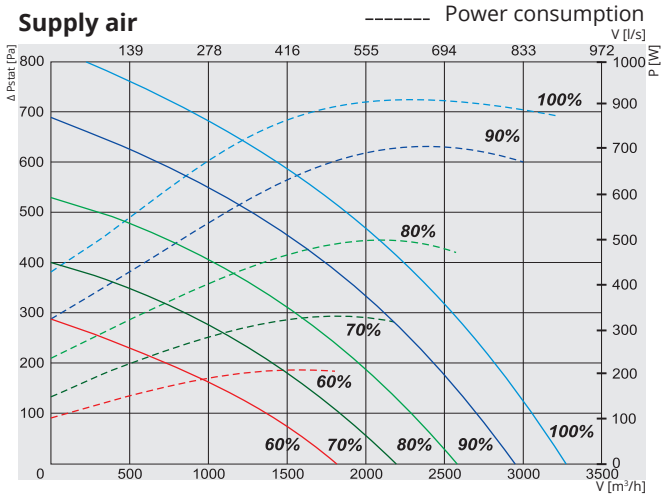

Exhaust air

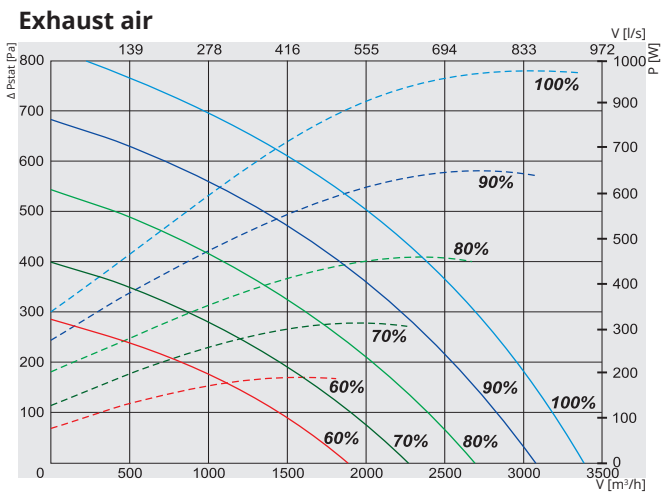

Specific fan power

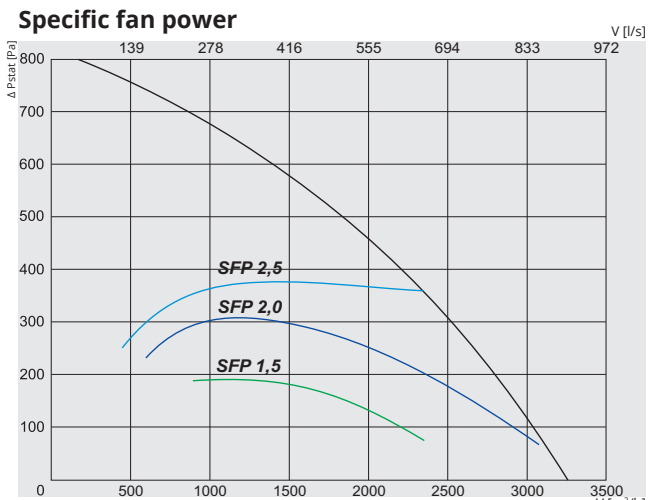

$$SFP = \frac{\text{total power for supply \& exhaust fans kW}}{\text{air flow m}^3\text{/h}} \times 3600$$

Temperature efficiency

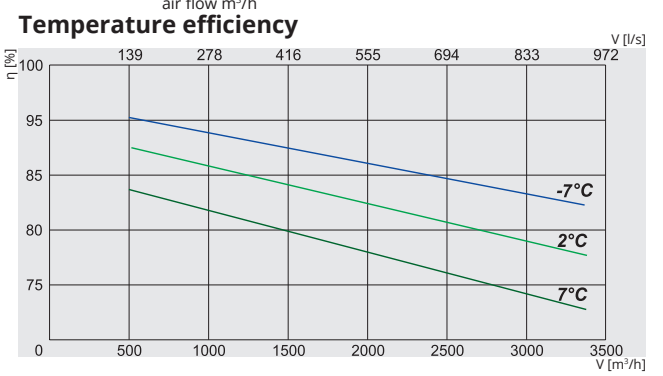

RIS 2500HL EKO 3.0

Air intake side (L - left)

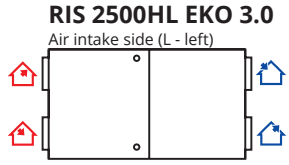

View from inspection side

RIS 2500HR EKO 3.0

Air intake side (R - right)

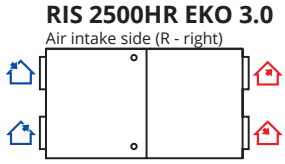

View from inspection side

Exhaust air Extract air Outdoor air Supply air

Article No.		Version
GAGRIS1793_0031B	2500HE EKO 3.0	Right-hand maintenace version with integrated electrical heater
GAGRIS1794_0032A	2500HW EKO 3.0	Right-hand maintenace version prepared for optional water heater

			2500HE / HW EKO 3.0	
Water heater (optional) HW ver.			SVS /	Comfort Box 600x350
Electrical heater HE ver.	phase/voltage	[50Hz/VAC]		~3, 400
		[kW]		3,6
EC fans	phase/voltage	[50Hz/VAC]		~1, 230
exhaust	power/current	[kW/A]		0,88/3,92
	fan speed	[min⁻¹]		2200
supply	power/current	[kW/A]		1,0/4,47
	fan speed	[min⁻¹]		2200
Thermal efficiency up to*				90%
Motorized by-pass				+
Max power consumption HE/HW		[kW/A]	5,49/13,69	1,89/8,49
Control board				PRV V2
Filter class	exhaust/supply			M5/F7
Housing insulation, mineral wool		[mm]		50
Colour	RAL	grey		7040
Weight (net, without packing)		[kg]	390	360
Comply with ERP				2016; 2018
Operation				indoors/outdoors***
Fresh air temperature limits**		°C		-5 - +40
Housing protection class	IP			34

* Calculated wet efficiency.
**For temperatures lower than recommended, use electrical pre-heater to ensure balanced operation.
***With proper roof mounted.

Temperature efficiency (balanced mass flow) :
Extract air = 20°C/60%RH
Outdoor air = -7°C / 2°C / 7°C

2500H EKO 3.0	Lwa total, dB(A)	LWA, dB(A) 125 Hz	250 Hz	500 Hz	1 kHz	2 kHz	4 kHz	8 kHz
Supply	83	65	73	75	78	79	71	61
Extract	65	57	61	59	56	54	49	39
Surrounding	62	45	57	58	55	52	44	36
Measured at 2976 m³/h, 121 Pa								

Certifications

EUROVENT certified
heat exchanger performance

EUROVENT CERTIFIED PERFORMANCE
www.eurovent-certification.com

AIR HANDLING UNITS

RIS H EKO

RIS 3500H EKO 3.0

——— Performance
------- Power consumption

Supply air

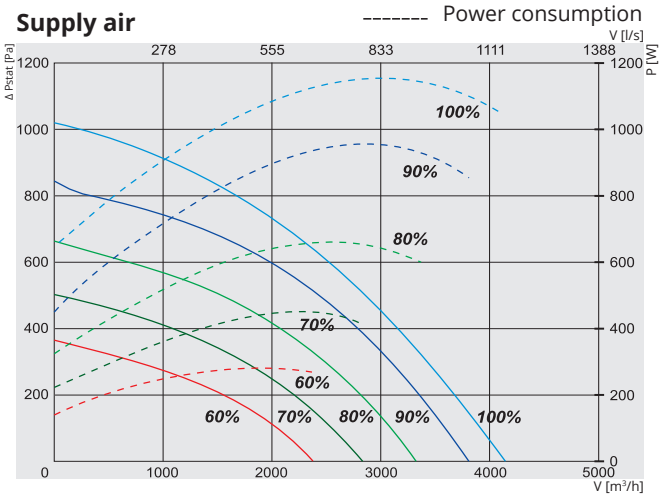

Exhaust air

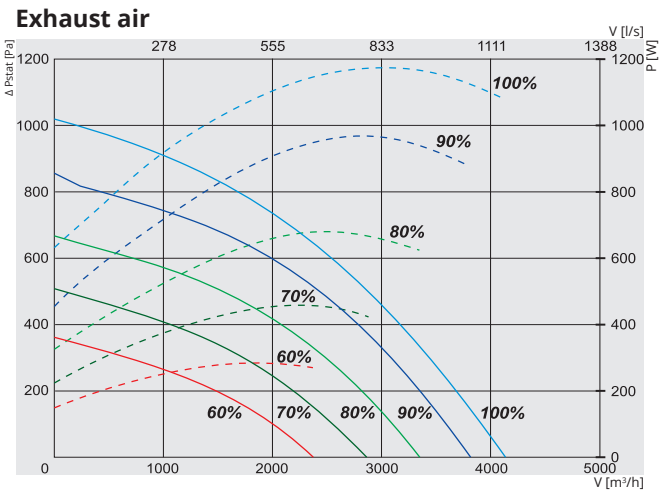

Specific fan power

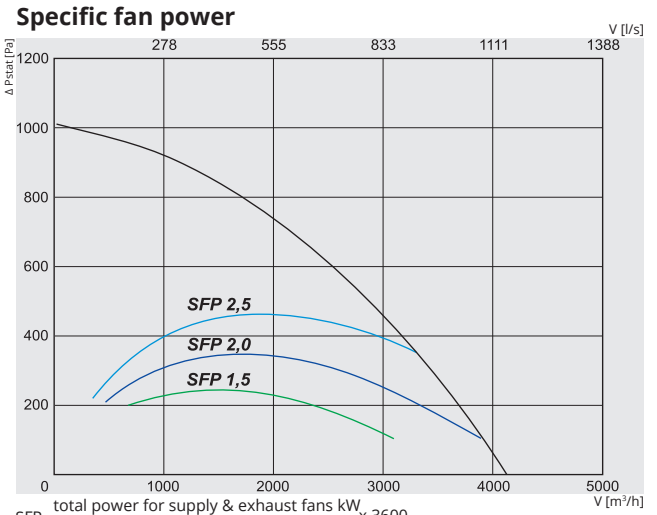

$$SFP = \frac{\text{total power for supply \& exhaust fans kW}}{\text{air flow m}^3\text{/h}} \times 3600$$

Temperature efficiency

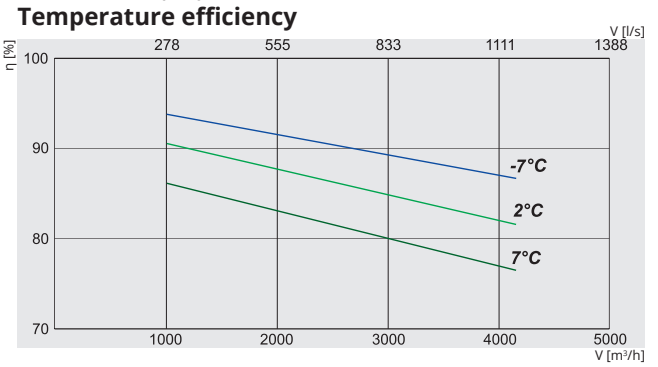

RIS 3500HL EKO 3.0

Air intake side (L - left)

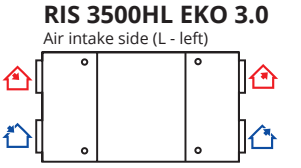

View from inspection side

Exhaust air | Extract air | Outdoor air | Supply air

Article No.		Version
GAGRIS1781_0052B	3500HEL EKO 3.0	Left-hand maintenace version with integrated electrical heater
GAGRIS1782_0053A	3500HWL EKO 3.0	Left-hand maintenace version prepared for optional water heater

3500HE / HW EKO 3.0

Water heater (optional) HW ver.				SVS / Comfort Box 800x500
Electrical heater HE ver.	phase/voltage	[50Hz/VAC]		~3, 400
		[kW]		6,0
EC fans	phase/voltage	[50Hz/VAC]		~1, 230
exhaust	power/current	[kW/A]		1,16/5,4
	fan speed	[min⁻¹]		2390
supply	power/current	[kW/A]		1,173/5,43
	fan speed	[min⁻¹]		2390
Thermal efficiency up to*				90%
Motorized by-pass				+
Max power consumption HE / HW		[kW/A]	8,34 /19,59	2,34 /10,95
Control board				PRV V2
Filter class	exhaust/supply			M5/F7
Housing insulation, mineral wool		[mm]		50
Colour	RAL	grey		7040
Weight (net, without packing)		[kg]	627	622
Comply with ERP				2016; 2018
Operation				indoors/outdoors***
Fresh air temperature limits**		°C		-5 - +40
Housing protection class	IP			34

* Calculated wet efficiency.
**For temperatures lower than recommended, use electrical pre-heater to ensure balanced operation.
***With proper roof mounted.

Temperature efficiency (balanced mass flow) :
Extract air = 20°C/60%RH
Outdoor air = -7°C / 2°C / 7°C

3500H EKO 3.0	Lwa total, dB(A)	LWA, dB(A) 125 Hz	250 Hz	500 Hz	1 kHz	2 kHz	4 kHz	8 kHz
Supply	86	68	82	78	80	77	70	68
Extract	72	66	66	65	64	58	49	45
Surrounding	69	59	65	62	62	59	52	58
Measured at 3746 m³/h, 181 Pa								

Certifications

EUROVENT certified
heat exchanger performance

EUROVENT CERTIFIED PERFORMANCE
www.eurovent-certification.com

The company reserves the right to make changes of technical data without prior notice

RIS 5500H EKO 3.0

Performance
Power consumption

Supply air

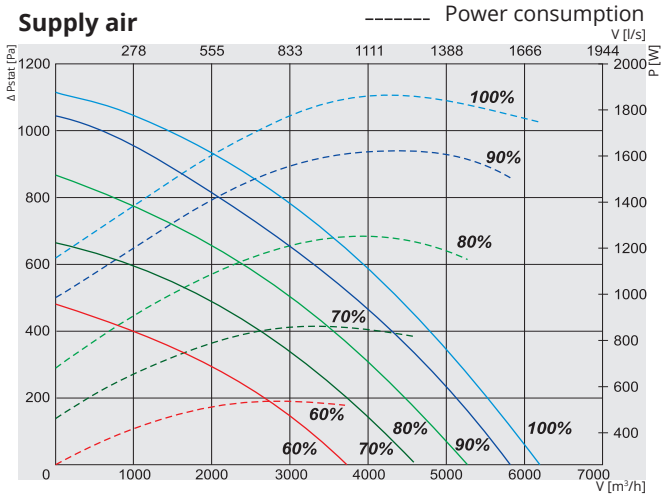

Exhaust air

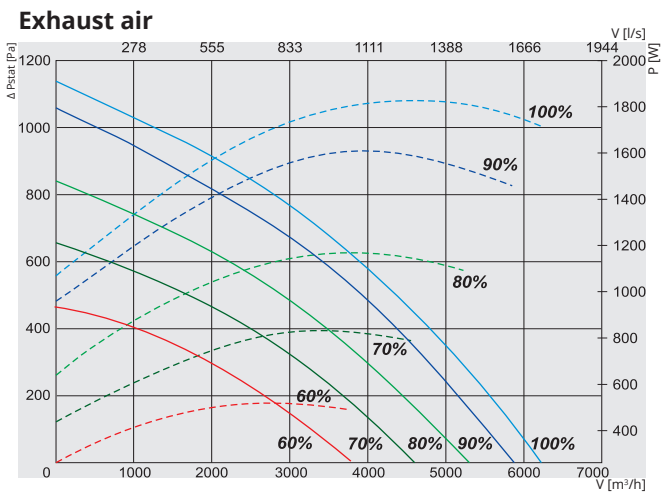

Specific fan power

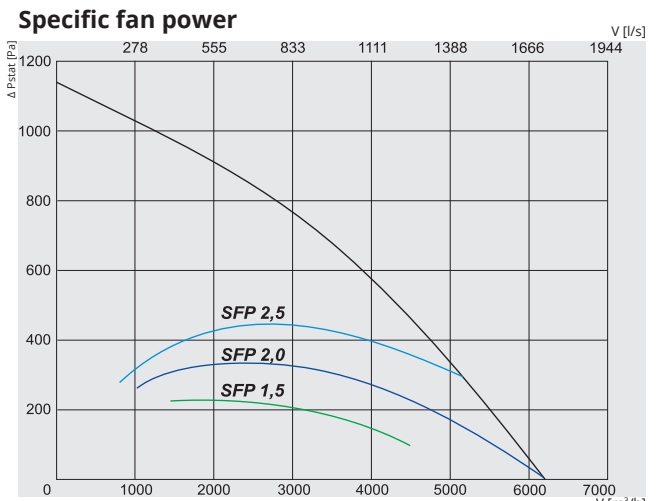

$$SFP = \frac{\text{total power for supply \& exhaust fans kW}}{\text{air flow m}^3\text{/h}} \times 3600$$

Temperature efficiency

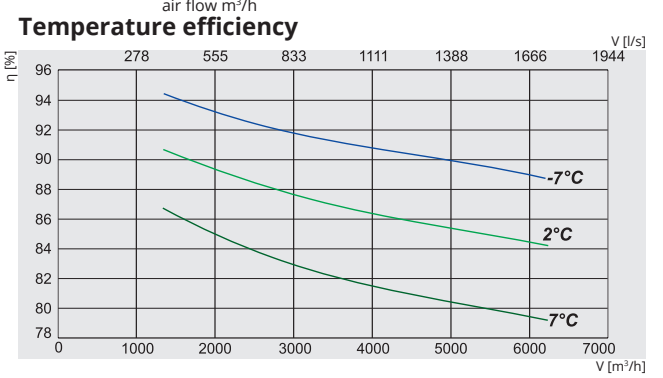

RIS 5500HR EKO 3.0

Air intake side (R - right)

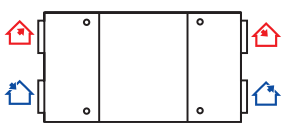

View from inspection side

Exhaust air | Extract air | Outdoor air | Supply air

Article No.		Version
GAGRIS1773_0054B	5500HER EKO 3.0	Right-hand maintenace version with integrated electrical heater
GAGRIS1774_0055B	5500HWR EKO 3.0	Right-hand maintenace version prepared for optional water heater

5500HE / HW EKO 3.0

Water heater (optional) HW ver.			SVS / Comfort Box 800x500
Electrical heater HE ver.	phase/voltage	[50Hz/VAC]	~3, 400
		[kW]	12
EC fans	phase/voltage	[50Hz/VAC]	~3, 400
exhaust	power/current	[kW/A]	1,87/3,06
	fan speed	[min⁻¹]	2180
supply	power/current	[kW/A]	1,84/2,88
	fan speed	[min⁻¹]	2180
Thermal efficiency up to*			90%
Motorized by-pass			+
Max power consumption HE/HW		[kW/A]	15,71/23,38 3,72/6,04
Control board			PRV V2
Filter class	exhaust/supply		M5/F7
Housing insulation, mineral wool		[mm]	60
Colour	RAL	grey	7040
Weight (net, without packing) HE / HW		[kg]	788
Comply with ERP			2016; 2018
Operation			indoors/outdoors***
Fresh air temperature limits**		°C	-5 - +40
Housing protection class	IP		34

* Calculated wet efficiency.
**For temperatures lower than recommended, use electrical pre-heater to ensure balanced operation.
***With proper roof mounted.

Temperature efficiency (balanced mass flow) :
Extract air = 20°C/60%RH
Outdoor air = -7°C / 2°C / 7°C

5500HW EKO 3.0	Lwa total, dB(A)	LWA, dB(A) 125 Hz	250 Hz	500 Hz	1 kHz	2 kHz	4 kHz	8 kHz
Supply	88	65	82	81	83	81	78	69
Extract	75	64	72	70	66	60	55	50
Surrounding	77	54	71	72	71	68	65	58
Measured at 5819 m³/h, 120 Pa								

Certifications

EUROVENT certified
heat exchanger performance

EUROVENT CERTIFIED PERFORMANCE
www.eurovent-certification.com

AIR HANDLING UNITS

RIS 700HE EKO 3.0 (horizontal) **version with electrical heater**

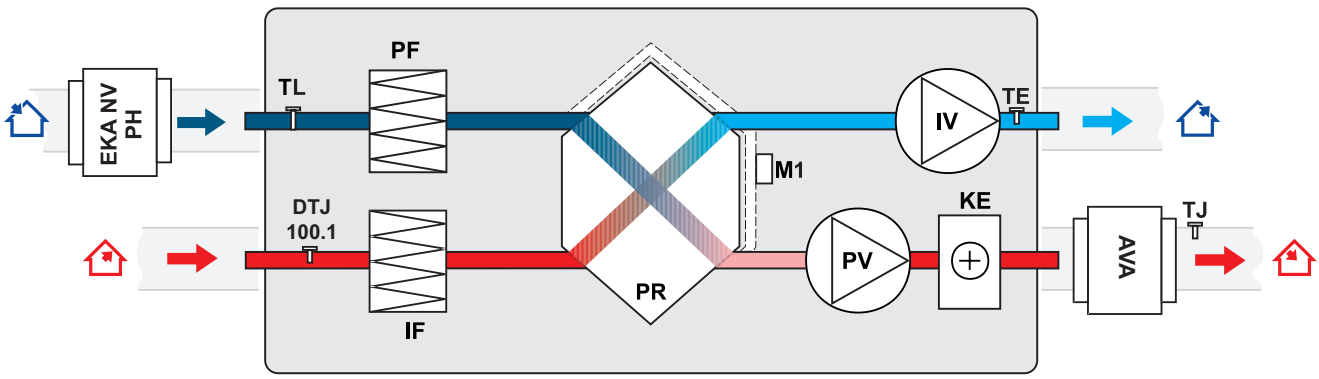

IV - exhaust air fan
PV - supply air fan
PR - plate heat exchanger
KE - electrical heater
PF - filter for supply air (class M5)
IF - filter for extract air (class M5)

TJ - temperature sensor for supply air
TL - temperature sensor for fresh air
TE - temperature sensor for exhaust air
M1 - actuator of by-pass damper
DTJ 100.1 - humidity + temperature sensor
EKA NV PH - optional fresh air pre-heater
AVA - optionally supplied water cooler

RIS 1200HE EKO 3.0 / RIS 1900HE EKO 3.0 / RIS 2200HE EKO 3.0 (horizontal) **versions with electrical heater**

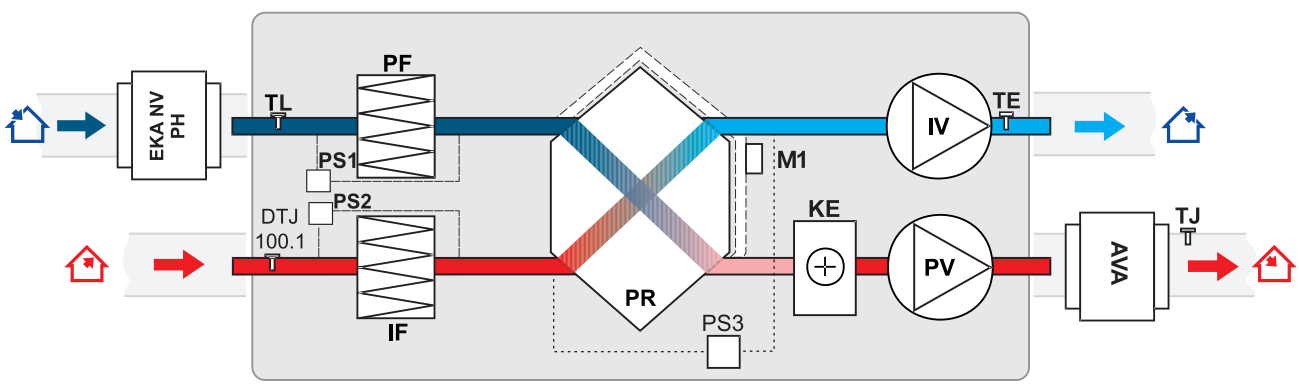

EKA NV PH - optional fresh air pre-heater
IV - exhaust air fan
PV - supply air fan
PR - plate heat exchanger
KE - electrical heater
PF - filter for supply air (class F7)
IF - filter for extract air (class M5)
TE - temperature sensor for extract air

AVA - optionally supplied water cooler
TL - temperature sensor for fresh air
TJ - temperature sensor for supply air
M1 - actuator of by-pass damper
PS1 - supply air differential pressure switch
PS2 - extract air differential pressure switch
PS3 - heat exchanger antifrost pressure switch
DTJ 100.1 - humidity + temperature sensor

The company reserves the right to make changes of technical data without prior notice

RIS 2500HE EKO 3.0 (horizontal) **version with electrical heater**

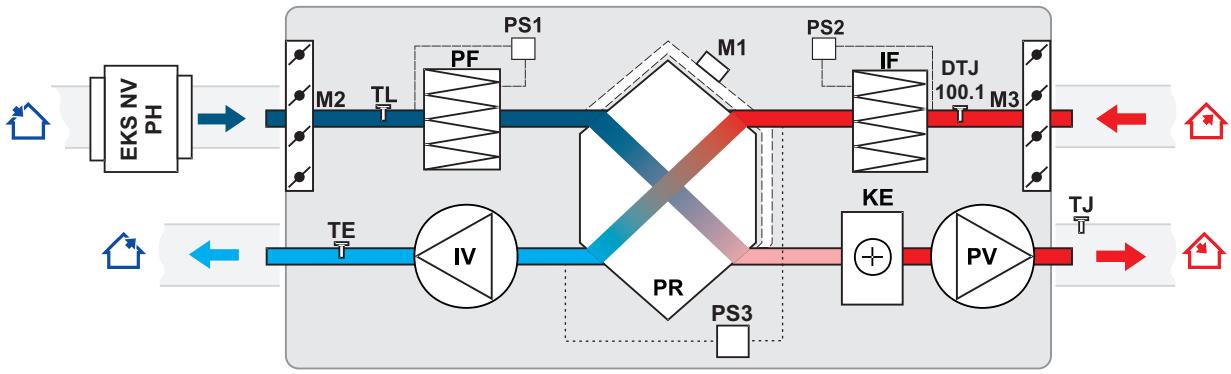

IV - exhaust air fan
PV - supply air fan
PR - plate heat exchanger
KE - electrical heater
PF - filter for supply air (class F7)
IF - filter for extract air (class M5)
DTJ 100.1 - humidity + temperature sensor
TE - temperature sensor for extract air
EKS NV PH - optional outdoor air heater
TL - temperature sensor for fresh air
TJ - temperature sensor for supply air
M1 - actuator of by-pass damper
M2 - actuator of fresh air damper
M3 - actuator of extract air damper
PS1 - supply air differential pressure switch
PS2 - extract air differential pressure switch
PS3 - heat exchanger antifrost pressure switch

RIS 3500HE EKO 3.0 (horizontal) **version with electrical heater**

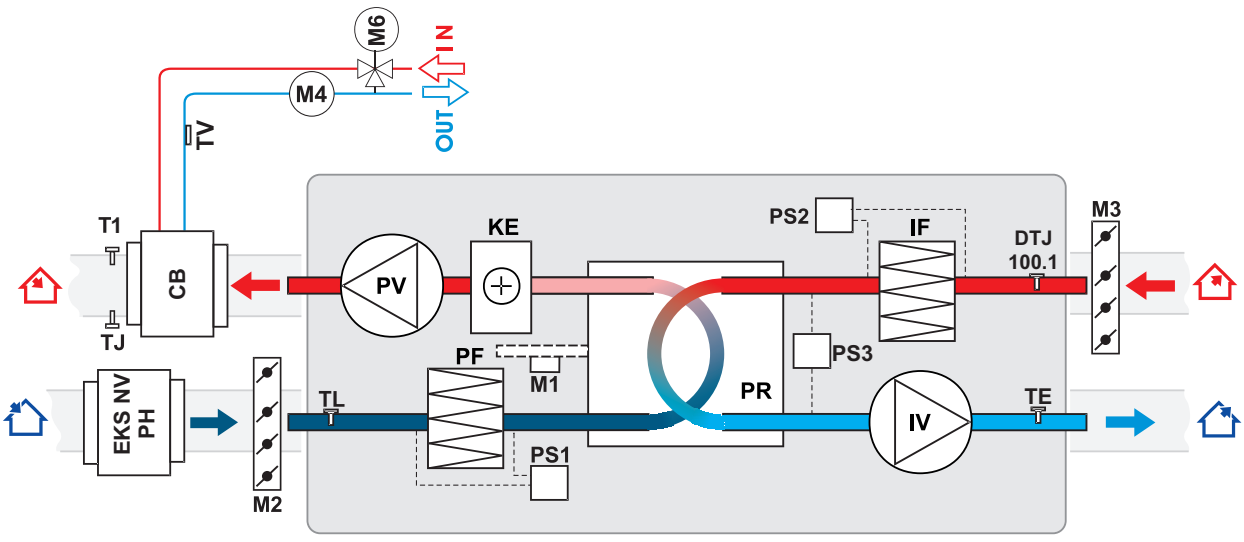

IV - exhaust air fan
PV - supply air fan
PR - plate heat exchanger
KE - electrical heater
PF - filter for fresh air (class F7)
IF - filter for extract air (class M5)
DTJ 100.1 - humidity + temperature sensor
TL - temperature sensor for fresh air
CB - water heater/cooler
M6 - optionally supplied mixing valve and motor
M4 - water heater circulation pump
TE - temperature sensor for exhaust air
TV - antifrost sensor
T1 - antifrost thermostat
EKS NV PH - optional outdoor air heater
TJ - temperature sensor for supply air
M1 - actuator of by-pass damper
M2 - actuator of fresh air damper
M3 - actuator of extract air damper
PS1 - supply air differential pressure switch
PS2 - extract air differential pressure switch
PS3 - heat exchanger antifrost pressure switch

RIS 5500HE EKO 3.0 (horizontal) version with electrical heater

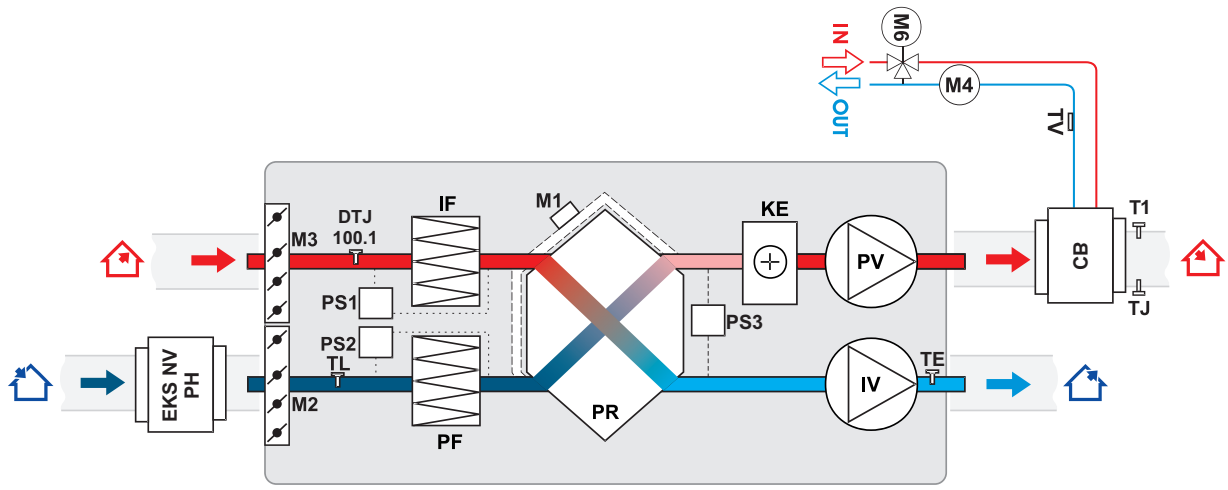

IV - exhaust air fan
PV - supply air fan
PR - plate heat exchanger
KE - electrical heater
PF - filter for supply air (class F7)
IF - filter for extract air (class M5)
DTJ 100.1 - humidity + temperature sensor
TL - temperature sensor for fresh air
TE - temperature sensor for exhaust air
TV - antifrost sensor
T1 - antifrost thermostat

CB - water heater/cooler
EKS NV PH - optional outdoor air heater
TJ - temperature sensor for supply air
M1 - actuator of by-pass damper
M2 - actuator of fresh air damper
M3 - actuator of extract air damper
M6 - optionally supplied mixing valve and motor
M4 - water heater circulation pump
PS1 - supply air differential pressure switch
PS2 - extract air differential pressure switch
PS3 - heat exchanger antifrost pressure switch

RIS 700HW EKO 3.0 version with optional water heater

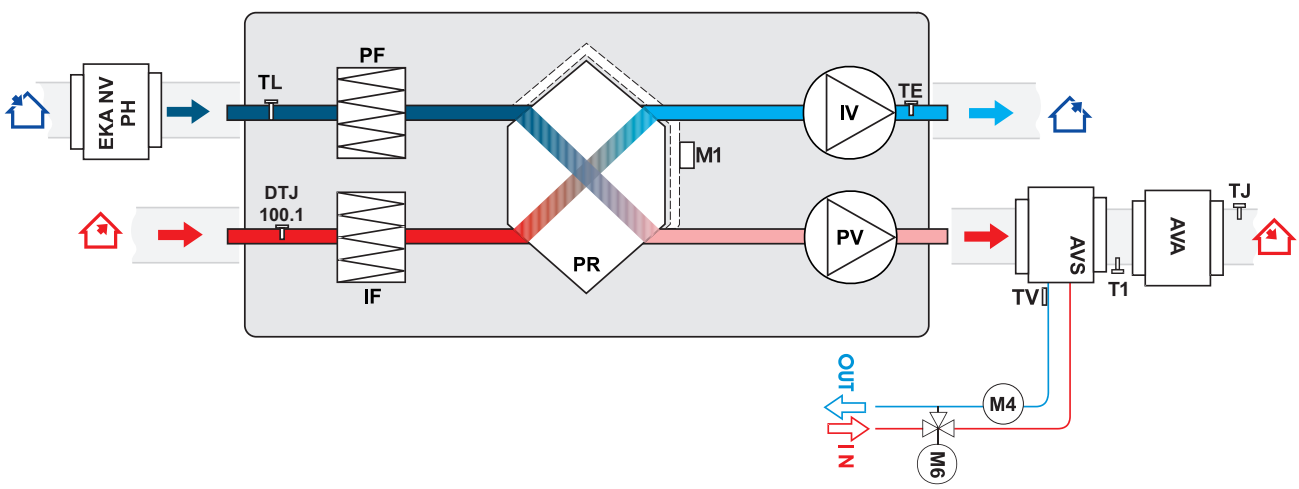

AVS - optionally supplied water heater
AVA - optionally supplied water cooler
IV - exhaust air fan
PV - supply air fan
PR - plate heat exchanger
PF - filter for supply air (class M5)
IF - filter for extract air (class M5)
TJ - temperature sensor for supply air
TL - temperature sensor for fresh air

TE - temperature sensor for exhaust air
TV - antifrost sensor
T1 - antifrost thermostat
DTJ 100.1 - humidity + temperature sensor
M1 - actuator of by-pass damper
M4 - water heater circulation pump
M6 - optionally supplied mixing valve and motor
EKA NV PH - optional fresh air pre-heater

The company reserves the right to make changes of technical data without prior notice

RIS 1200HW EKO 3.0 / RIS 1900HW EKO 3.0 / RIS 2200HW EKO 3.0 (horizontal) version with optional water heater

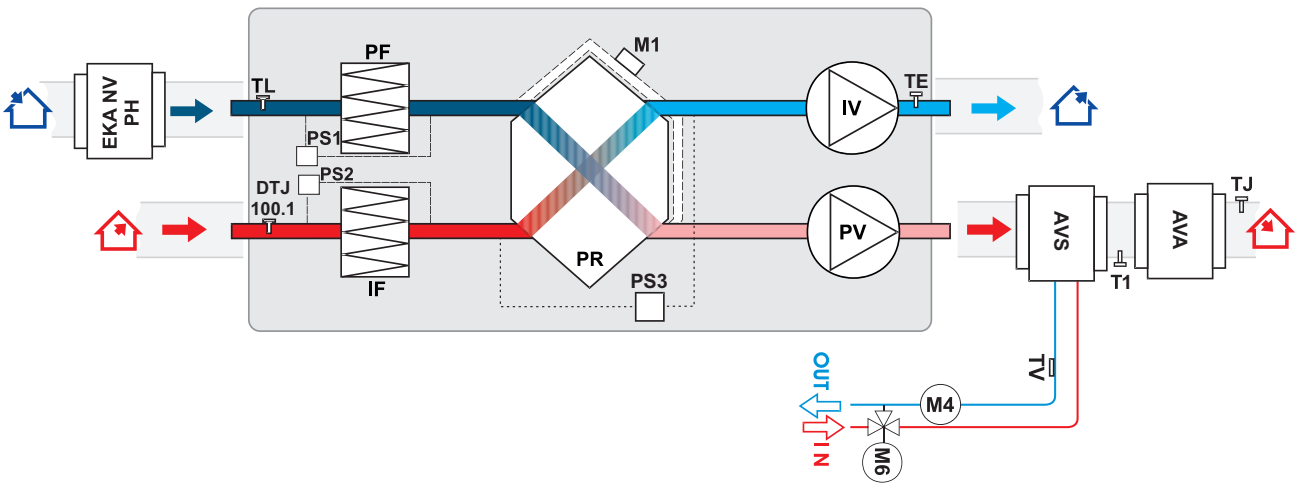

EKA NV PH - optional fresh air pre-heater
IV - exhaust air fan
PV - supply air fan
PR - plate heat exchanger
PF - filter for supply air (class F7)
IF - filter for extract air (class M5)
TL - temperature sensor for fresh air
TJ - temperature sensor for supply air
TV - antifrost sensor
T1 - antifrost thermostat

AVA - optionally supplied water cooler
AVS - water heater
M1 - actuator of by-pass damper
M6 - optionally supplied mixing valve and motor
M4 - water heater circulation pump
PS1 - supply air differential pressure switch
PS2 - extract air differential pressure switch
PS3 - heat exchanger antifrost pressure switch
DTJ 100.1 - humidity + temperature sensor
TE - temperature sensor for extract air

RIS 2500HW EKO 3.0 (horizontal) version with optional water heater

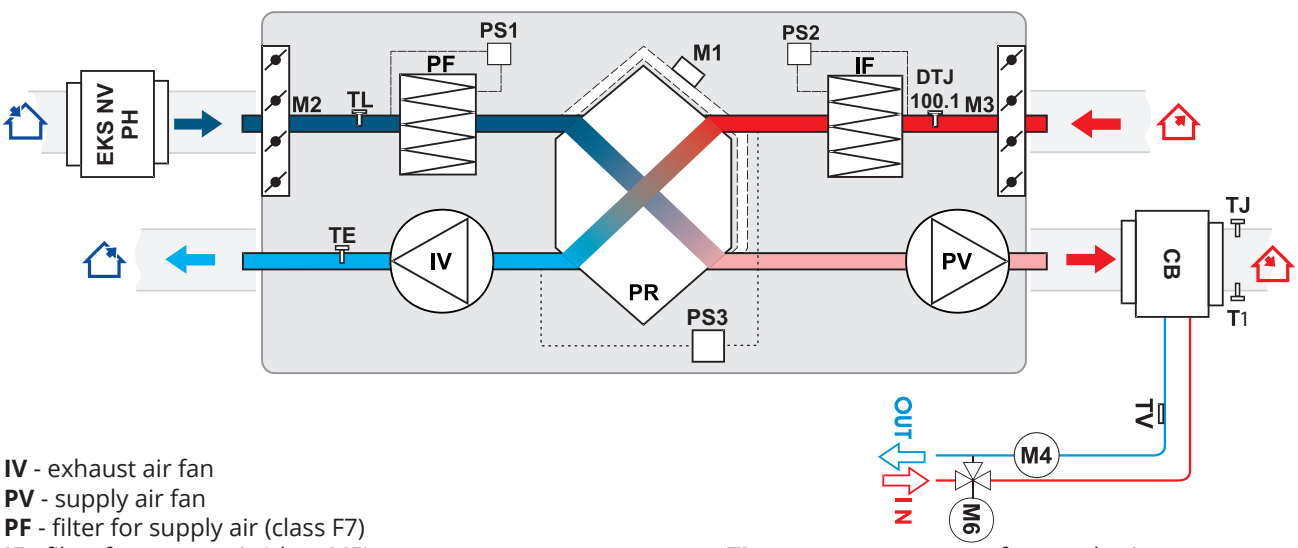

IV - exhaust air fan
PV - supply air fan
PF - filter for supply air (class F7)
IF - filter for extract air (class M5)
PR - plate heat exchanger
DTJ 100.1 - humidity + temperature sensor
TL - temperature sensor for fresh air
TV - antifrost sensor
T1 - antifrost thermostat
TE - temperature sensor for extract air
EKS NV PH - optional outdoor air heater
CB - water heater/cooler

TJ - temperature sensor for supply air
M - actuator of by-pass damper
M2 - actuator of fresh air damper
M3 - actuator of extract air damper
M6 - optionally supplied mixing valve and motor
M4 - water heater circulation pump
PS1 - supply air differential pressure switch
PS2 - extract air differential pressure switch
PS3 - heat exchanger antifrost pressure switch

RIS 3500HW EKO 3.0 (horizontal) version with optional water heater

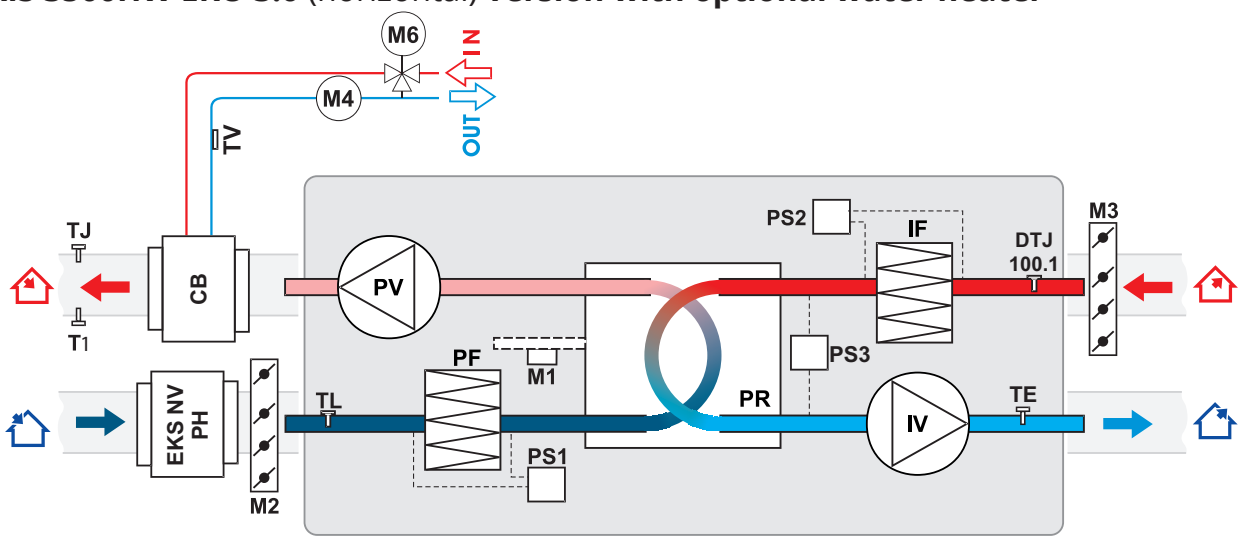

CB - water heater/cooler
IV - exhaust air fan
PV - supply air fan
PR - plate heat exchanger
PF - filter for supply air (class F7)
IF - filter for extract air (class M5)
DTJ 100.1 - humidity + temperature sensor
TL - temperature sensor for fresh air
TV - antifrost sensor
T1 - antifrost thermostat
TE - temperature sensor for exhaust air

EKS NV PH - optional outdoor air heater
TJ - temperature sensor for supply air
M1 - actuator of by-pass damper
M2 - actuator of fresh air damper
M3 - actuator of extract air damper
M6 - optionally supplied mixing valve and motor
M4 - water heater circulation pump
PS1 - supply air differential pressure switch
PS2 - extract air differential pressure switch
PS3 - heat exchanger antifrost pressure switch

RIS 5500HW EKO 3.0 (horizontal) version with optional water heater

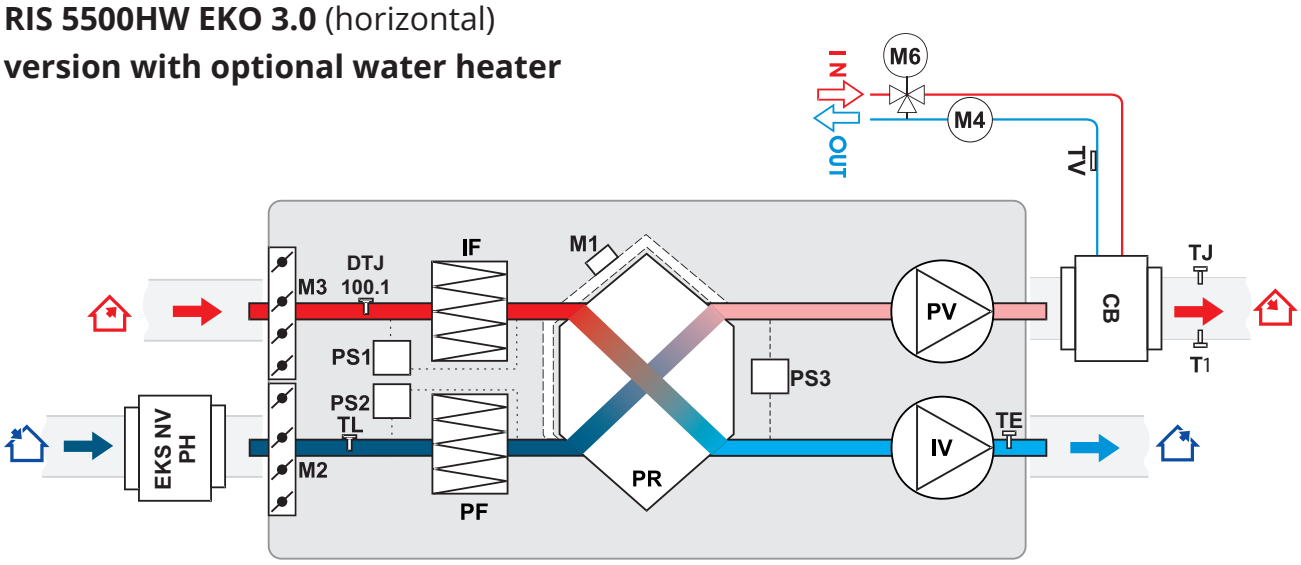

CB - water heater/cooler
IV - exhaust air fan
PV - supply air fan
PR - plate heat exchanger
PF - filter for supply air (class F7)
IF - filter for extract air (class M5)
DTJ 100.1 - humidity + temperature sensor
TL - temperature sensor for fresh air
TV - antifrost sensor
T1 - antifrost thermostat

TJ - temperature sensor for supply air
M1 - actuator of by-pass damper
M2 - actuator of fresh air damper
M3 - actuator of extract air damper
M6 - optionally supplied mixing valve and motor
M4 - water heater circulation pump
PS1 - supply air differential pressure switch
PS2 - extract air differential pressure switch
PS3 - heat exchanger antifrost pressure switch
EKS NV PH - optional outdoor air heater

The company reserves the right to make changes of technical data without prior notice

FUNCTIONS		
Description of the functions	PRV V2	
	RIS EKO 3.0	
	E	W
Functions		
Date and time settings	✓	✓
4 speeds for easy and user-friendly control ("Stop" – the unit is stopped; "Low", medium", and "High". Service menu allows adjusting each speed individually)	✓	✓
BOOST function (Fans operate at highest speed)	✓	✓
Comfortable air temperature function	✓	✓
Cold/heat recovery	✓	✓
Fire place function	✓	✓
Dryness protection	✓	✓
Weekly schedule	✓	✓
Holiday schedule	✓	✓
User and service control levels	✓	✓
Manual air flow balancing	✓	✓
CO_2 level indication and reduction function	✓	✓
Night cooling function	✓	✓
Relative humidity (RH) level indication and reduction function	✓	✓
Software and configuration update possibility	✓	✓
Supply air temperature control according to the extract air sensor	✓	✓
Monitoring function (all sensors and I/O)	✓2	✓2
Mode switch (start/stop)	✓	✓
Extracted air relative humidity converter	✓	✓
Manual components control	✓1	✓1
Functional units		
Fans		
Soft start and stop	✓	✓
Fan failure protection	✓	✓
Speed synchronous/asynchronous 0-10V control	✓	✓
Electric heater		
On/Off / PWM control	✓	
Manual protection	✓	
Overheat protection (additional protection software)	✓	✓
Water heater		
Pulse-width modulation (PWM) valve actuator control		✓
Protection using temperature sensor		✓
Protection using termostat (NC)		✓
Circulation pump control		✓
Return water temperature sensor	✓	✓
DX cooler		
Control On/Off	✓	✓
Water cooler		
Pulse-width modulation (PWM) valve actuator control		✓
Control with three-positional valve actuator	✓	✓
Bypass damper		
3-position actuator control	✓	✓
Filter pollution monitoring		
By pressure switch (NC)	✓	✓
By filter timer	✓	✓
Sensors		
Supply air temperature sensor	✓	✓
Fresh air temperature sensor	✓	✓
Exhaust air temperature sensor	✓	✓
Extract air temperature sensor	✓	✓
Emergency signals and inputs/outputs		
Fire protection input	✓	✓
Working indication output	✓	✓
Alarm indication output	✓	✓
Remote controllers		
Stouch	✓	✓
Flex	✓	✓
Ptouch	✓	✓
MB-Gateway	✓	✓

1	With FLEX TEST remote controler	2	Only sensors