EKA / EKA NV / EKA NI / EKA NIS

Electric duct heater

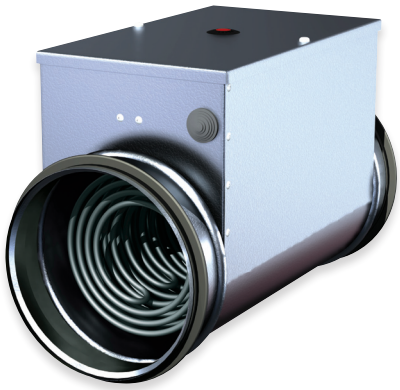

EKA duct heaters are designed to heat clean air in ventilation systems and to preheat air handling units. Corrosion resistant casing with excellent thermal reflectivity is made from AluZinc. Duct connection is with rolled rubber seals, duct heater elements are made from stainless steel. To ensure safety in duct heaters are installed 2 protection thermostats and screw terminals for easy connection.
To ensure long service time of heaters, heaters casing is manufactured from AluZinc coated steel and heating elements from stainless steel AISI 304. AluZinc for heaters casing was selected for it's properties:
› Good corrosion resistance at high temperatures (up to 315°C).
› Excellent thermal reflectivity.
› Good abrasion resistance because of its surface hardness.
› Durability: under normal conditions the AZ 150 coating grade will protect the steel substrate from corrosion for a minimum period of 15 years.

Double overheat protection.
To ensure security in case of fire in all electric air heaters are installed 2 heat protection thermostats:
› First overheat protection automatically activates if temperature reaches 50°C, then protection disconnects heating elements, until it has cooled. When the temperature falls to the working temperature, heater automatically switches on.
› Second overheat protection automatically activates if temperature reaches 100°C, then protection disconnects heating elements, until it has cooled. In this case need to figure the cause of the overheating of the heater. Heater needs to be reset manually with the pushbutton on the heaters casing.

Duct connection.
For easy duct connection heaters casing is with rolled rubber seals.

Heaters with built-in control.
Electric duct heaters with built-in control has installed internal controller EKR-KN which works by algorithm impulse/pause that enables fine temperature control. Regulator controls load by triacs without moving parts, which causes no-noise commutation.

ACCESSORIES

MARKING

EKA	-	NV	-	400	-	15.0	-	3f	-	PTC	PS
1		*2*		*3*		*4*		*5*		*6*	*7*

1. EKA – circular duct heater
2. NV – heater type.
*Type **NV** - you can set temperature of heater with potentiometer installed on heaters casing.*
*Type **NI** - you can set temperature from distance with wired remote potentiometer **TR5K.***
*Type **NIS** – heater control from distance with 0 – 10V signal.*
*3. **400** – heater diameter.*
*4. **15.0** – power of heater kW.*
*5. **3f** – number of phases.*
*6. **PTC** – heater with installed air flow sensor.*
*7. **PS** – heater with installed pressure sensor.*
*8. **PTC/PS type can be marked also as NV PH if temperature setpoint of the heater -20°C to -5°C.***

CIRCULAR DUCT HEATER TYPES

Model	Control	Control type
EKA	External controller EKR	External control
EKA NV	Built-in controller EKR KN NV	Control on heaters casing, default temperature setpoint 0°C ... +30°C
EKA NV PTC/PS, NV PH	Built-in controller EKR KN NV PTC/PS EKR KN PH	Control on heaters casing, default temperature setpoint -10°C ... +50°C. Air flow sensor and pressure sensor are installed inside the heater. Difference between heaters is EKA NV PTC/PS and EKA NV PH, that EKA NV PH temperature setpoint is -20°C iki -5°C.
EKA NI	Built-in controller EKR KN NI	Remote control with wired potentiometer, default temperature setpoint 0°C ... +30°C
EKA NIS	Built-in controller EKR KN NIS	0-10V control

In heaters type NV PTC/PS are installed controllers with default temperature setpoint -10°C ... +50°C, on your needs we can install controllers with different temperature setpoints:

-40°C till -10°C	0°C till +30°C	-5°C till 0°C
-20°C till -5°C	-10°C till 0°C	-20°C till +30°C
-10°C till +40°C	-	-

The company reserves the right to make changes of technical data without prior notice

ACCESSORIES

Controller for electrical heater	Controller for electrical heater	Controller for electrical heater	Controller for electrical heater	Controller for electrical heater	Temperature sensor
					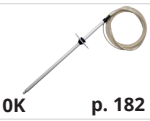
EKR 6.1 **p. 207**	**EKR 15.1** **p. 205**	**EKR 15.1P** **p. 205**	**EKR 30** **p. 206**	**EKR 30P** **p. 206**	**TJK-10K** **p. 182**

CONTROL

Model	Controlled load [kW]	Extra load control*	Full load	Relay output	Voltage output**
EKR15.1	15 kW	Up to 12 kW	27 kW	1x5A/230V	3x230/3x400
EKR15.1P	15 kW	Up to 225 kW	240 kW	4x5A/230V	3x230/3x400
EKR30	30 kW	Up to 42 kW	42 kW	1x5A/230V	3x230/3x400
EKR30P	30 kW	Up to 420 kW	450 kW	4x5A/230V	3x230/3x400

** Extra load control with contactor.*
*** Available voltage 3x230V, according to the current selected controlled power.*

Model	Controlled load [kW]	Maximum controlled current [A]	Voltage output
EKR 6.1	6,4 kW/400V	16 A	2x400V
	3.2 kW/230V		1x230V

CIRCULAR DUCT HEATERS POWER & DIMENSIONS

All circular duct heaters EKA regardless of the type can be produced in following dimensions and power:

Type	Diameter	Min. airflow [m³/h]	Voltage [V/50Hz]	Power [kW]
EKA (NV, NV PTC/PS, NV PH, NI, NIS)	100	40	1x230	0.3, 0.6, 0.9, 1.2
EKA (NV, NV PTC/PS, NV PH, NI, NIS)	125	70	1x230	0.3, 0.6, 0.9, 1.2, 1.8, 2.4
EKA (NV, NV PTC/PS, NV PH, NI, NIS)	160	110	1x230	0.3, 0.6, 0.9, 1.2, 1.8, 2.4
			2x400	3.0, 5.0, 6.0
			3x400	6.0
EKA (NV, NV PTC/PS, NV PH, NI, NIS)	200	170	1x230	0.9, 1.2, 1.8, 2.4, 3.0
			2x400	3.0, 5.0, 6.0
			3x400	6.0
EKA (NV, NV PTC/PS, NV PH, NI, NIS)	250	270	1x230	1.2, 2.0, 2.4, 3.0
			2x400	3.0, 5.0, 6.0
			3x400	6.0, 9.0, 12.0
EKA (NV, NV PTC/PS, NV PH, NI, NIS)	315 315	415 550	1x230	1.2, 2.0, 2.4, 3.0
			2x400	3.0, 5.0, 6.0
			3x400	6.0, 9.0, 12.0
EKA (NV, NV PTC/PS, NV PH, NI, NIS)	400	690	1x230	3.0, 5.0, 6.0
			2x400	3.0, 5.0, 6.0
			3x400	6.0, 9.0, 12.0, 15.0, 18.0
EKA (NV, NV PTC/PS, NV PH, NI, NIS)	500	1060	2x400	3.0, 5.0, 6.0
			3x400	6.0, 9.0, 12.0, 15.0, 18.0, 24.0

18.0 and 24.0 kW heaters are produced on customers request.

Production time can be longer as usually.

270 mm – dimension for heaters up to 12kW

400 mm – dimension for 12 kW heaters

520 mm – dimension for 15 kW heaters

370 mm – dimension for heaters up to 12kW

505 mm – dimension for 12 kW heaters

630 mm – dimension for 15 kW heaters

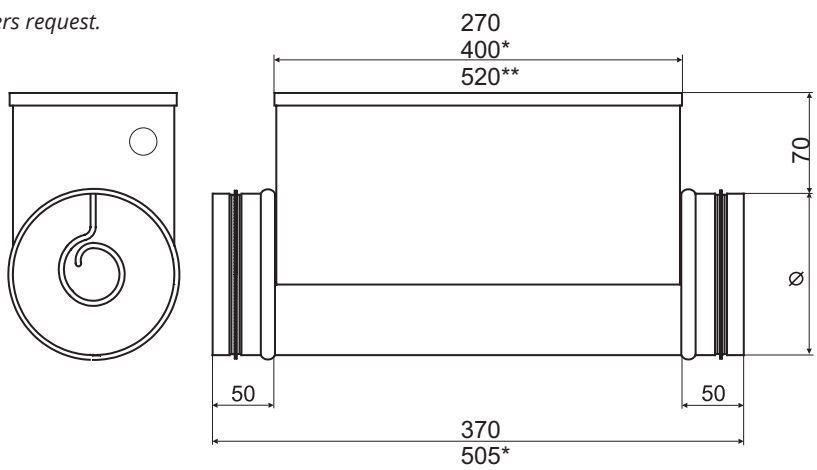

ACCESSORIES

EKA / EKA NV / EKA NI / EKA NIS

EKA NV connection diagram

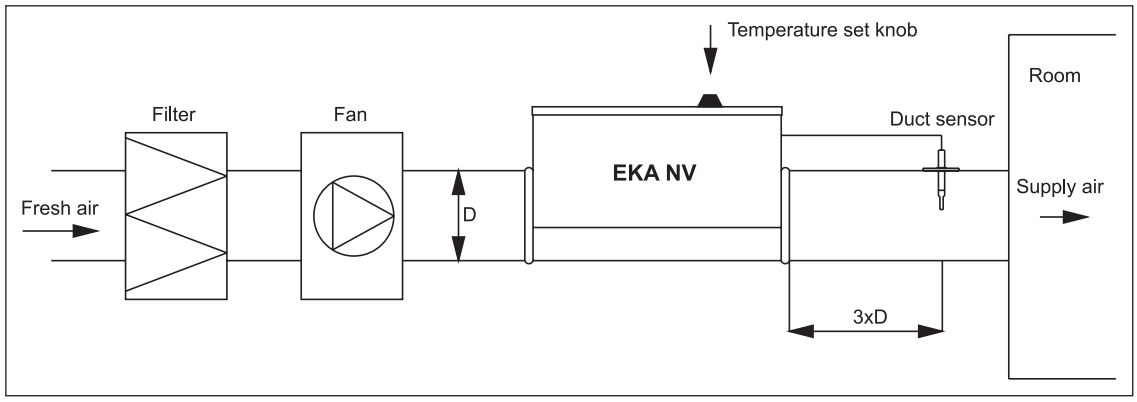

EKA NI connection diagram

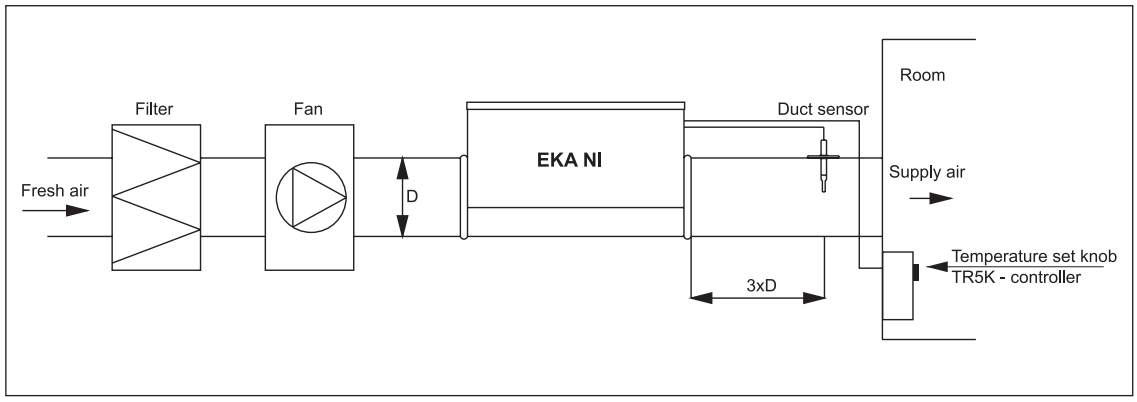

EKA NIS connection diagram

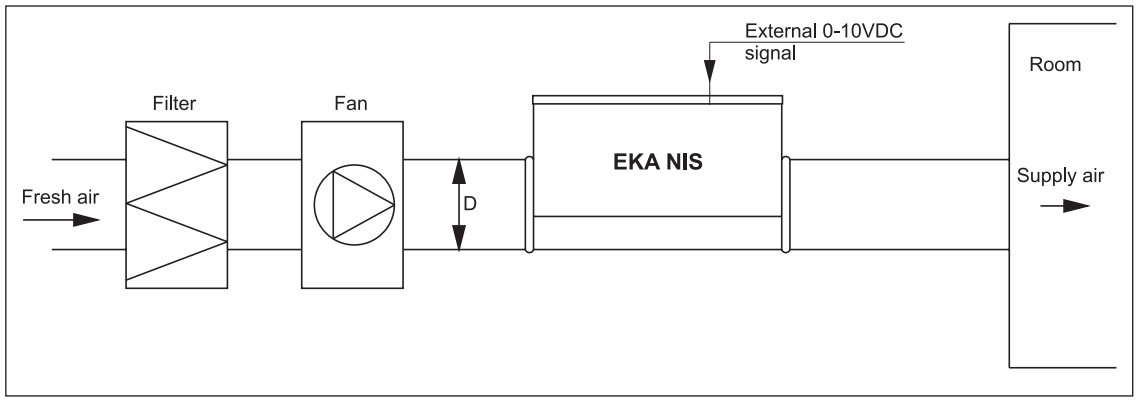

Installation example EKA NV PTC/PS

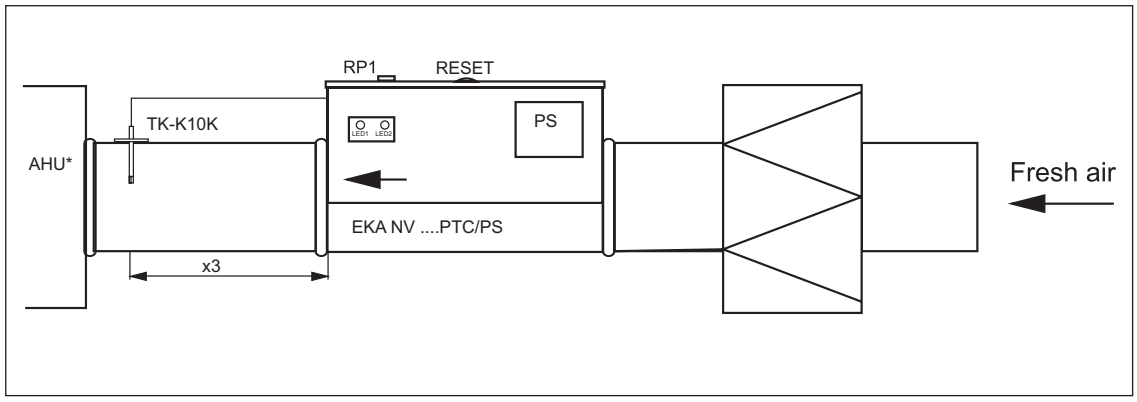

The company reserves the right to make changes of technical data without prior notice

Electric duct heater

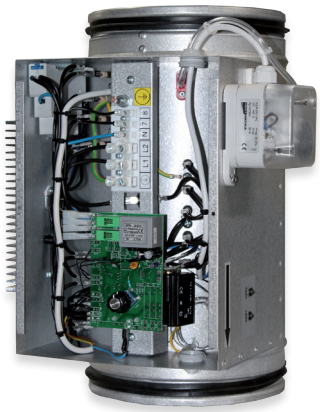

Electric heaters are designed to heat clean air in ventilation systems. Casing is made from aluzinc coated steel which is high temperature proof. Heating elements tube is made from stainless steel AISI 304. Heaters are equipped with 2 protection thermostats, pressure switch, supply air sensor, air flow sensor, screw terminals for easy connection. Casing is with rubber seals for duct connection. Heaters can be installed vertically or horizontally. Maximum output air temperature 50°C.

Type	Type of preheater	Number of phases	[kW]*	Air flow based on the outside temperature, [m³/h]		
				-10°C	-15°C	-23°C
RIS 200VE/VW 3.0	EKA NV 125-0,3-1/PH	1	0,3	167	83	46
	EKA NV 125-0,6-1/PH	1	0,6	333	167	93
	EKA NV 125-0,9-1/PH	1	0,9	500	250	139
	EKA NV 125-1,2-1/PH	1	1,2	667	333	185
RIS 400VE/VW 3.0	EKA NIS 160-0,3-1/PH	1	0,3	167	83	46
	EKA NIS 160-0,6-1/PH	1	0,6	333	167	93
	EKA NIS 160-0,9-1/PH	1	0,9	500	250	139
	EKA NIS 160-1,2-1/PH	1	1,2	667	333	185
RIS 400PE/PW EKO 3.0	EKA NIS 200-0,9-1/PH	1	0,9	333	167	139
	EKA NV 200-1,5-1f/PH	1	1,5	-	410	225
	EKA NV 200-3,0-1f/PH	1	3,0	-	-	450
RIS 700HE/HW 3.0 RIS 700VE/VW 3.0 RIS 700PE/PW EKO 3.0	EKA NV 250-0,6-1/PH	1	0,6	333	167	93
	EKA NV 250-0,9-1/PH	1	0,9	500	250	139
	EKA NV 250-1,2-1/PH	1	1,2	667	333	185
	EKA NV 250-2,0-1/PH	1	2,0	-	556	309
	EKA NV 250-5,0-2/PH	1	5,0	-	-	772
RIS 1200HE/HW 3.0 RIS 1200VE/VW 3.0	EKA NV 315-1,0-1/PH	1	1,0	556	278	154
	EKA NV 315-1,2-1/PH	1	1,2	667	333	185
	EKA NV 315-2,0-1/PH	1	2,0	1111	556	309
	EKA NV 315-3,0-1/PH	1	3,0	-	833	463
	EKA NV 315-5,0-2/PH	1	5,0	-	1389	772
	EKA NV 315-6,0-3/PH	1	6,0	-	-	926
RIS 1900HE/HW 3.0 RIS 1900VE/VW 3.0	EKA NV 400-1,0-1/PH	1	1,0	556	278	154
	EKA NV 400-1,2-1/PH	1	1,2	667	333	185
	EKA NV 400-2,0-1/PH	1	2,0	1111	556	309
	EKA NV 400-5,0-2/PH	2	5,0	-	1389	772
	EKA NV 400-6,0-3/PH	3	6,0	-	1667	926
	EKA NV 400-9,0-3/PH	3	9,0	-	-	1389
	EKA NV 400-12,0-3/PH	3	12,0	-	-	1852
RIS 1200PE/PW EKO 3.0	EKS NV 500x250x370/3/PH	1	3,0	-	833	463
	EKS NV 500x250x370/5/PH	2	5,0	-	1389	772
	EKS NV 500x250x370/9/PH	3	9,0	-	-	1230

EKA NV PH

Type	Type of preheater	Number of phases	[kW]*	Air flow based on the outside temperature, [m³/h]		
				-10°C	-15°C	-23°C
RIS 2500HE/HW 3.0	EKS NV 600x350x370/3/PH	1	3,0	1667	833	463
	EKS NV 600x350x370/6/PH	3	6,0	-	1667	926
	EKS NV 600x350x370/9/PH	3	9,0	-	2500	1389
	EKS NV 600x350x370/12/PH	3	12,0	-	-	1852
	EKS NV 600x350x370/15/PH	3	15,0	-	-	2315
RIS 1900PE/PW EKO 3.0	EKS NV 700x300x370/5/PH	2	5,0	-	1389	772
	EKS NV 700x300x370/9/PH	3	9,0	-	-	1389
	EKS NV 700x300x370/12/PH	3	12,0	-	-	1852
RIS 2500PE/PW EKO 3.0	EKS NV 700x400x370/5/PH	2	5,0	2750	1389	680
	EKS NV 700x400x370/9/PH	3	9,0	-	2500	1389
	EKS NV 700x400x370/18/PH	3	18,0	-	-	2450
RIS 3500HE/HW 3.0	EKS NV 800x500x370/6/PH	3	6,0	3333	1667	926
	EKS NV 800x500x370/9/PH	3	9,0	-	2500	1389
	EKS NV 800x500x370/12/PH	3	12,0	-	3333	1852
RIS 5500HE/HW 3.0	EKS NV 800x500x370/15/PH	3	15,0	-	4167	2315
	EKS NV 800x500x370/18/PH	3	18,0	-	5000	2778
	EKS NV 800x500x370/24/PH	3	24,0	-	-	3704
	EKS NV 800x500x370/30/PH	3	30,0	-	-	4630

* pre-heating power calculated up to -5°C

The company reserves the right to make changes of technical data without prior notice

Electric duct heater

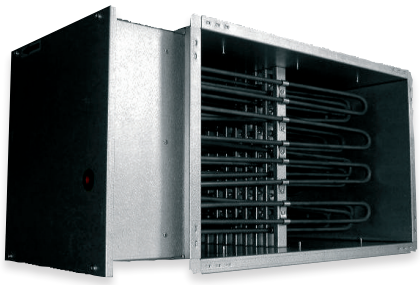

Duct heaters are designed to heat clean air in ventilation systems and to preheat air handling units. Corrosion resistant casing with excellent thermal reflectivity is made from AluZinc. Duct connection is with rolled rubber seals, duct heater elements are made from stainless steel. To ensure safety in duct heaters are installed 2 protection thermostats and screw terminals for easy connection.
To ensure long service time of heaters, heaters casing is manufactured from AluZinc coated steel and heating elements from stainless steel AISI 304. AluZinc for heaters casing was selected for it's properties:
› Good corrosion resistance at high temperatures (up to 315°C).
› Excellent thermal reflectivity.
› Good abrasion resistance because of its surface hardness.
› Durability: under normal conditions the AZ 150 coating grade will protect the steel substrate from corrosion for a minimum period of 15 years.

Double overheat protection.
To ensure security in case of fire in all electric air heaters are installed 2 heat protection thermostats:
› First overheat protection automatically activates if temperature reaches 50°C, then protection disconnects heating elements, until it has cooled. When the temperature falls to the working temperature, heater automatically switches on.
› Second overheat protection automatically activates if temperature reaches 100°C, then protection disconnects heating elements, until it has cooled. In this case need to figure the cause of the overheating of the heater. Heater needs to be reset manually with the pushbutton on the heaters casing.

Duct connection
For easy duct connection heaters casing is with rolled rubber seals.

MARKING

EKS NV 40 x 20/21 PTC/PS

1 2 3 4 5 6 7

1. EKA – circular duct heater.
2. NV – heater type.
*Type **NV** - you can set temperature of heater with potentiometer installed on heaters casing.*
*Type **NI** - you can set temperature from distance with wired remote potentiometer TR5K.*
*Type **NIS** – heater control from distance with 0 – 10V signal.*
*3. **40** – heater height cm.*
*4. **20** – heaters width.*
*5. **21** – power of heater kW.*
*6. **PTC** – heater with installed air flow sensor.*
*7. **PS** – heater with installed pressure sensor.*
PTC/PS type can be marked also as NV PH if temperature setpoint of the heater -20°C to -5°C.

RECTANGULAR DUCT HEATER TYPES

Model	Control	Control type
EKS	External controller EKR	External control
EKS NV	Built-in controller EKR-KN NV	Control on heaters casing, default temperature setpoint 0°C ... +30°C
EKS NV PTC/PS, NV PH	Built-in controller EKR-KN NV PTC/PS EKR-KN NV PH	Control on heaters casing, default temperature setpoint -10°C ... +50°C. Air flow sensor and pressure sensor are installed inside the heater. Difference between heaters is EKS NV PTC/PS and EKS NV PH, that EKS NV PH temperature setpoint is -20°C iki -5°C.
EKS NI	Built-in controller EKR-KN NI	Remote control with wired potentiometer, default temperature setpoint 0°C ... +30°C
EKS NIS	Built-in controller EKR-KN NIS	0-10V control

In heaters type NV PTC/PS are installed controllers with default temperature setpoint -10°C ... +50°C, on your needs we can install controllers with different temperature setpoints:

-40°C till -10°C	0°C till +30°C	-5°C till 0°C
-20°C till -5°C	-10°C till 0°C	-20°C till +30°C
-10°C till +40°C	-	-

ACCESSORIES

Controller for electrical heater	Controller for electrical heater	Controller for electrical heater	Controller for electrical heater	Controller for electrical heater	Temperature sensor
EKR 6.1 **p. 207**	**EKR 15.1** **p. 205**	**EKR 15.1P** **p. 205**	**EKR 30** **p. 206**	**EKR 30P** **p. 206**	**TJK-10K** **p. 182**

CONTROL

Model	Controlled load [kW]	Extra load control*	Full load	Relay output	Voltage output**
EKR15.1	15 kW	Up to 12 kW	27 kW	1x5A/230V	3x230/3x400
EKR15.1P	15 kW	Up to 225 kW	240 kW	4x5A/230V	3x230/3x400
EKR30	30 kW	Up to 42 kW	42 kW	1x5A/230V	3x230/3x400
EKR30P	30 kW	Up to 420 kW	450 kW	4x5A/230V	3x230/3x400

** Extra load control with contactor.*
*** Available voltage 3x230V, according to the current selected controlled power.*

Model	Controlled load [kW]	Maximum controlled current [A]	Voltage output
EKR 6.1	6,4 kW/400V	16 A	2x400V
	3.2 kW/230V		1x230V

DUCT HEATERS POWER & DIMENSIONS

*All, regardless of the type of electric duct heaters ECS dimensions and power (voltage 3x400V)**

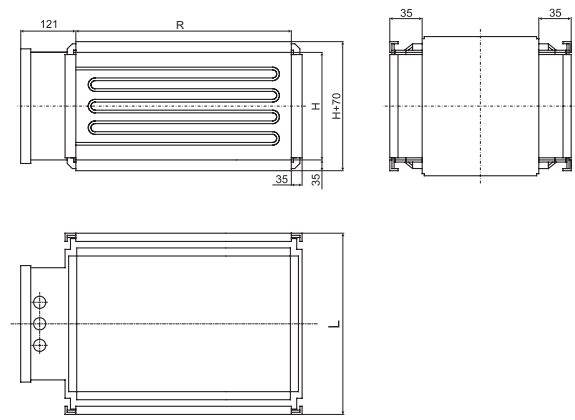

EKS NV/NI/NIS/PTC/PS/PH 400x200						
Length L	[mm]	370			420	520
Total rated power	[kW]	6	9	12	15	21

EKS NV/NI/NIS/PTC/PS/PH 500x250								
Length L	[mm]	370		420	520	600	820	970
Total rated power	[kW]	9	12	15	21	24	36	45

EKS NV/NI/NIS/PTC/PS/PH 500x300													
Length L	[mm]	370						440			520	600	
Total rated power	[kW]	9	12	15	18	21	24	27	30	33	36	42	45

EKS NV/NI/NIS/PTC/PS/PH 600x300													
Length L	[mm]	370						440			520	600	
Total rated power	[kW]	9	12	15	18	21	24	27	30	33	36	42	45

EKS NV/NI/NIS/PTC/PS/PH 600x350														
Length L	[mm]	370								420			500	
Total rated power	[kW]	9	12	15	18	21	24	27	30	33	36	39	42	45

EKS NV/NI/NIS/PTC/PS/PH 700x400																
Length L	[mm]	370											440		520	
Total rated power	[kW]	9	12	15	18	21	24	27	30	33	36	42	45	51	60	66

EKS NV/NI/NIS/PTC/PS/PH 800x500																		
Length L	[mm]	370													420		440	500
Total rated power	[kW]	9	12	15	18	21	24	27	30	33	36	39	42	45	51	54	60	66

EKS NV/NI/NIS/PTC/PS/PH 1000x500																		
Length L	[mm]	370													420		440	500
Total rated power	[kW]	9	12	15	18	21	24	27	30	33	36	39	42	45	51	54	60	66

*According to the technical inquiries can be made non-standard power, voltage, and dimensions heaters.

The company reserves the right to make changes of technical data without prior notice

Controller of electrical heating

Title	Article No.
EKR 15.1	PRGR0018

EKR15.1 is a proportional controller for electric heaters with automatic voltage adaptation. EKR15.1 controls the whole load On-Off. The ratio between On-time and Off-time is varied 0-100% to suit the prevailing heat demand.
EKR15.1 is designed only for electric heating control. The control principle makes it unsuitable for motor or lighting control.
EKR15.1 can control 15kW heater and has relay output for extra load control with contactor, on which can be connected load up to 12kW. Full load can be 27kW.

Control principle

EKR15.1 has zero phase-angle detection to prevent RFI (radio frequency interference).
EKR15.1 automatically adapts its control mode to suit the dynamics of the controlled object. For rapid temperature changes i. e. supply air control EKR15.1 will act as a PID controller. For slow temperature changes i.e. room control EKR15.1 will act as a PID* controller.

*PID- proportional–integral–derivative.

Night set-back
Potential-free closure will give a night set-back of 0-10°C. Settable with a potentiometer (Contacts 10, 11) in the EKR15.1.

Technical data

Controlled load [kW]	15
Extra controlled load (recommended) * [kW]	12
Total controlled load [kW]	27
Max. conrolled current [A]	25
Voltage [V]	3x230/3x400
Frequency [Hz]	50-60
Phases	3~
Dimensions (WxHxL) [mm]	270x145x130
Fuse [A]	2 x 0,315
Protection class	IP20
Ambient temperature without condensation [°C]	0-40
Heat dissipation [W]	50
Ambient humidity	90%RH max.

* Extra load should be connected via contactor to the relay output.

Controllers conform to requirements of standards EN 61010-1+A2: 2000, EN 50081-1: 1995, EN 55022: 2000 and carry the CE mark.

Title	Article No.
EKR 15.1P	PRGR0008

EKR15.1P is a proportional controller for multistep(up to 5 steps) electric heaters with automatic voltage adaptation. EKR15.1P controls the whole load On-Off. The ratio between On-time and Off-time is varied 0-100% to suit the prevailing heat demand.
EKR15.1P is designed only for electric heating control. The control principle makes it unsuitable for motor or lighting control.
EKR15.1P can control with triac output 15kW heater and has four relay outputs for 4 extra load steps control with contactors, on which can be connected load up to 225kW. Full load can be 240kW.

Control principle

Triac output of EKR15.1P has zero phase-angle detection to prevent RFI (radio frequency interference).
If triac output is ON more then 5 min controller will increase output by one step. Second step will be switch on after 2 min if previous is switched on for this time. All steps are switching in such order to increasing output. In case then output decreasing is needed, step will be switch off after 5min. Other steps will be switch off after 2 min to decrease output.
Extra load steps can be switched in binary or serial mode. Number of connected extra load steps can be selected with rotating switch. In binary mode switching steps can be 0-15, in serial mode 0-4.

Night set-back
Potential-free closure will give a night set-back of 0-10°C. Settable with a potentiometer (Contacts 10, 11) in the EKR15.1P.

Technical data

Controlled load [kW]	15
Extra load control output	4x5A/230V
Max. triac conrolled current [A]	25
Voltage [V]	3x230/3x400
Frequency [Hz]	50-60
Phases	3~
Dimensions (WxHxL) [mm]	105 x 260 x 120
Fuse [A]	2x 0,315
Protection class	IP20
Ambient temperature without condensation [°C]	0-40
Heat dissipation [W]	50
Ambient humidity	90%RH max.

* Extra load should be connected via contactor to the relay output.

Controllers conform to requirements of standards EN 61010-1+A2: 2000, EN 50081-1: 1995, EN 55022: 2000 and carry the CE mark.

EKR 30 / EKR 30P

Controller of electrical heating

Title	Article No.
EKR 30	PRGR0009

EKR30 is a proportional controller for electric heaters with automatic voltage adaptation. EKR 30 controls the whole load On-Off. The ratio between On-time and Off-time is varied 0-100% to suit the prevailing heat demand. EKR 30 is designed only for electric heating control. The control principle makes it unsuitable for motor or lighting control. EKR30 can control 30kW heater and has relay output for extra load control with contactor, on which can be connected load up to 12kW. Full load can be 42kW.

Control principle

EKR30 has zero phase-angle detection to prevent Radio Frequency Interference. EKR 30 automatically adapts its control mode to suit the dynamics of the controlled object . For rapid temperature changes i. e. supply air control EKR 30 will act as a PI controller. For slow temperature changes i.e. room control EKR 30 will act as a P controller.
Night set-back: potential-free closure will give a night set-back of 1-10°C. Settable with a potentiometer (Contacts Timer-GND) in the EKR 30.

Technical data

Controlled load [kW]	30
Extra controlled load [kW] (recommended) *	12
Total controlled load [kW]	42
Max. conrolled current [A]	45
Voltage [V]	3 x 230/3 x 400
Frequency [Hz]	50-60
Phases	3~
Dimensions (LxWxH) [mm]	240x260x175
Fuse [A]	2 x 0,315
Protection class	IP20
Ambient temperature without condensation [°C]	0-40
Heat dissipation [W]	120
Ambient humidity	90% RH max.

* Extra load should be connected via contactor to the relay output.
Controllers conform to requirements of standards EN 61010-1+A2:2000, EN 50081-1:1995, EN 55022:2000 and carry the CE mark.

Title	Article No.
EKR 30P	PRGR0084

EHC-30-P is a proportional controller for multistep(up to 5 steps) electric heaters with automatic voltage adaptation. EHC-30-P controls the whole load On-Off. The ratio between On-time and Off-time is varied 0-100% to suit the prevailing heat demand.
EHC-30-P is designed only for electric heating control. The control principle makes it unsuitable for motor or lighting control. EHC-30-P can control with triac output 15kW heater and has four relay outputs for 4 extra load steps control with contactors, on which can be connected load up to 225kW. Full load can be 255kW.

Control principle

Control principle:
Triac output of EHC-30-P has zero phase-angle detection to prevent Radio Frequency Interference.
If triac output is ON more then 5 min controller will increase output by one step. Second step will be switch on after 2 min if previous is switched on for this time. All steps are switching in such order to increasing output. In case then output decreasing is needed, step will be switch off after 5min. Other steps will be switch off after 2 min to decrease output. Extra load steps can switching in binary or serial mode (switch 4). Number of connected extra load steps can be selected with micro switch 5, 6.
Night set-back: potential-free closure will give a night set-back of 0-10°C. Settable with a potentiometer (Contacts Timer-GND) in the EHC-30-P.

Technical data

Controlled load [kW]	30
Extra load control output	4 x 5A/230V
Max. conrolled current [A]	45
Voltage [V]	3 x 230/3 x 400
Frequency [Hz]	50-60
Phases	3~
Dimensions (LxWxH) [mm]	240x260x175
Fuse [A]	2 x 0,315
Protection class	IP20
Ambient temperature without condensation [°C]	0-40
Heat dissipation [W]	120
Ambient humidity	90% RH max.

* Extra load should be connected via contactor to the relay output.
Controllers conform to requirements of standards EN 61010-1+A2:2000, EN 50081-1:1995, EN 55022:2000 and carry the CE mark.

The company reserves the right to make changes of technical data without prior notice

Controller of electrical heating

Title	Article No.
EKR 6.1	PRGR0011

EKR6.1 is a proportional controller of electrical heating with automatic adaptation of voltage. An internal or an external sensor is used with the device. EKR6.1 controls the heating intensity by switching electrical power on or off. The ratio between the off-time and on-time depends on the need for heating and can vary in the range between 0% and 100%. EKR6.1 is suitable for the control of electrical heating only. Its principle of operation preclude its being used for the control of motors or lighting systems. EKR6.1 is not suitable for the control of three-phase electrical current, it is used to control monophasic and biphasic heaters only.

Technical data

Max. controlled load [kW]	6,4/400V, 3,2/230V
Max. conrolled current [A]	16
Voltage [V]	230-415
Frequency [Hz]	50-60
Phases	1~230V, 2~400V
Dimensions (WxHxL) [mm]	150 x 80 x 55
Protection class	IP20
Ambient temperature [°C]	30 max.
Ambient humidity	90% RH max.

Controllers conform to requirements of standards LST EN 61010-1:2002, LST EN 55022:2000, LST EN 60730-1+A11: 2002/A16 2007 and carry the CE mark.

Control principle

EKR6.1 controls the full load On-Off. EKR6.1 adjusts the mean power output to the prevailing power demand by proportionally adjusting the ratio between On-time and Off-time.

EKR6.1 has zero phase-angle detection for preventing RFI (radio frequency interference).

EKR6.1 automatically adjusts it's control mode to suit the controlled object's dynamics.

For rapid temperature changes i.e. supply air control EKR6.1 will act as a PID controller.

For slow temperature changes i.e. room control EKR6.1 will act as a PID controller.

Night temperature set-back

Potential-free closure will give a night set-back of 1 - 10°C. Settable with a potentiometer which is in the EKR6.1.