ACCESSORIES FOR DUCT FANS

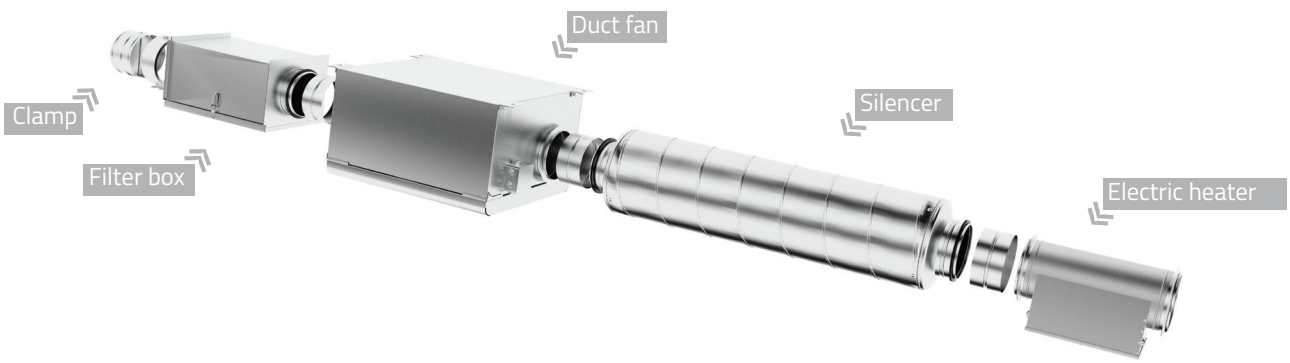

Duct fans are mostly used in low-to medium-pressure ducted systems with additional components such as heaters, filter boxes, dampers, etc.

Filter cassette

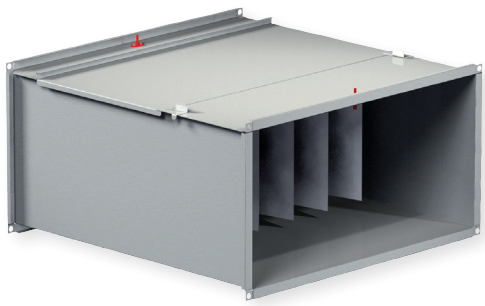

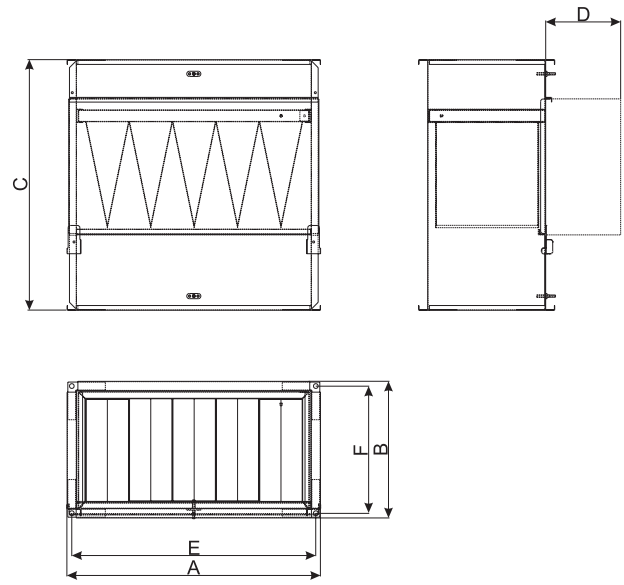

Title	Article No.
FDS 30-15/ G4	GFZFDS044
FDS 40-20/ G4	GFZFDS023
FDS 50-25/ G4	GFZFDS024
FDS 50-30/ G4	GFZFDS014
FDS 60-30/ G4	GFZFDS012
60-35/ G4	GFZFDS019
FDS 70-40/ G4	GFZFDS010
FDS 80-50/ G4	GFZFDS022
FDS 100-50/ G4	GFZFDS021
FDS 30-15/ M5	GFZFDS045
FDS 40-20/ M5	GFZFDS002
FDS 50-25/ M5	GFZFDS003
FDS 50-30/ M5	GFZFDS004

FDS 60-30/ M5	GFZFDS005
FDS 60-35/ M5	GFZFDS006
FDS 70-40/ M5	GFZFDS007
FDS 80-50/ M5	GFZFDS008
FDS 100-50/ M5	GFZFDS009
FDS 40-20/ F7	GFZFDS015
FDS 50-25/ F7	GFZFDS025
FDS 50-30/ F7	GFZFDS030
FDS 60-30/ F7	GFZFDS013
FDS 60-35/ F7	GFZFDS011
FDS 70-40/ F7	GFZFDS017
FDS 80-50/ F7	GFZFDS043
FDS 100-50/ F7	GFZFDS016

Filter boxes FDS are used to clean supplied air. They are mounted into a system of rectangular air ducts. Completed with exchangeable FMK-type G4-M5-F7 class pocket filters. In the filter box, a pocket filter is mounted in a horizontal position with pockets facing downwards. The casing is made of galvanized steel. Possibility to connect pressure switch for the filter pollution measurement.

Pressure drop

The diagram shows pressure drop in filter cassette type FDS which is equipped with a panel of standard filter G4 and M5 class.

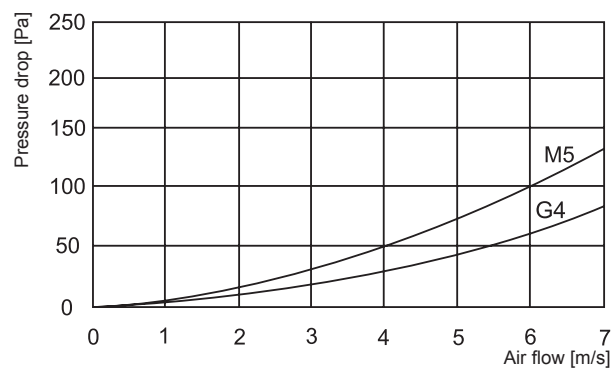

Dimensions

Type	W x H, [mm]	A, [mm]	B, [mm]	C, [mm]	D, [mm]	E, [mm]	F, [mm]
FDS 40-20	400x200	440	240	502	240	420	220
FDS 50-25	500x250	540	290	532	290	520	270
FDS 50-30	500x300	540	340	562	340	520	320
FDS 60-30	600x300	640	340	642	340	620	320
FDS 60-35	600x350	640	390	717	390	620	370
FDS 70-40	700x400	740	440	787	440	720	420
FDS 80-50	800x500	840	540	887	540	820	520
FDS 100-50	1000x500	1040	540	987	540	1020	520

FDS has to be installed into duct system in such a way that a certain space (according to dim. D) should be left for opening the door in case of changing a bag filter.

The company reserves the right to make changes of technical data without prior notice

Filter cassette

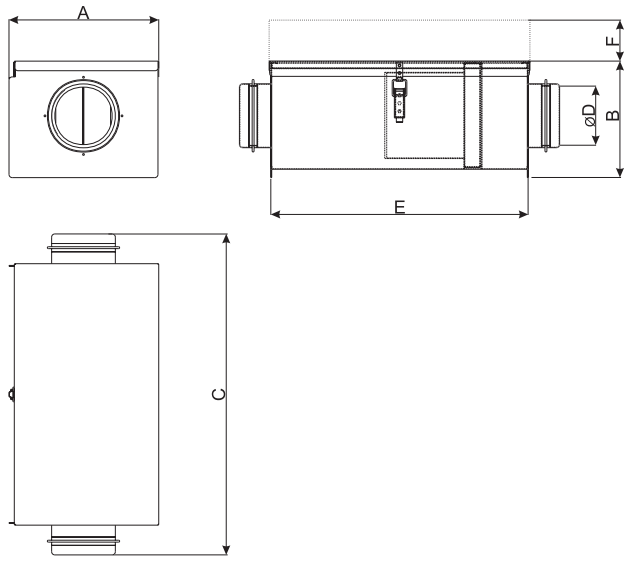

Title	Article No.
FDI 100/ G4	GFZFDI018
FDI 125/ G4	GFZFDI016
FDI 160/ G4	GFZFDI011
FDI 200/ G4	GFZFDI013
FDI 250/ G4	GFZFDI014
FDI 315/ G4	GFZFDI026
FDI 355/ G4	GFZFDI066
FDI 400/ G4	GFZFDI015
FDI 500/ G4	GFZFDI036
FDI 630/ G4	GFZFDI037
FDI 100/ M5	GFZFDI001
FDI 125/ M5	GFZFDI002
FDI 160/ M5	GFZFDI003
FDI 200/ M5	GFZFDI004
FDI 250/ M5	GFZFDI005
FDI 315/ M5	GFZFDI006
FDI 355/ M5	GFZFDI035
FDI 400/ M5	GFZFDI007
FDI 500/ M5	GFZFDI008
FDI 630/ M5	GFZFDI009
FDI 100/ F7	GFZFDI031
FDI 125/ F7	GFZFDI032
FDI 160/ F7	GFZFDI010
FDI 200/ F7	GFZFDI012
FDI 250/ F7	GFZFDI025
FDI 315/ F7	GFZFDI017
FDI 355/ F7	GFZFDI034
FDI 400/ F7	GFZFDI033
FDI 500/ F7	GFZFDI030
FDI 630/ F7	GFZFDI065

Filter boxes FDI are used to clean supplied air. They are mounted into a system of circular air ducts. Completed with exchangeable FMK-type G4-M5-F7 class pocket filters. The casing is made of galvanized steel with rubber sealed circular connection. Maintenance cover is attached to the casing using one hinge and is easily removable.

Dimensions

Type	A, [mm]	B, [mm]	C, [mm]	øD, [mm]	E, [mm]	F, [mm]
FDI 100	232	182	503	100	404	182
FDI 125	242	217	503	125	404	217
FDI 160	292	247	507	160	424	247
FDI 200	332	282	557	200	474	282
FDI 250	392	337	643	250	534	337
FDI 315	452	402	708	315	599	402
FDI 355	492	457	718	355	609	457
FDI 400	542	507	758	400	609	507
FDI 500	672	612	823	500	674	612
FDI 630	772	712	948	630	799	712

FDI has to be installed into duct system in such a way, that a certain space (according to dim. F) should be left for opening the door in case of changing a bag filter.

Pressure drop

The diagram shows pressure drop in filter cassette type FDI which is equipped with a standard bag filter of G4, M5 or F7 class.

FDI 100

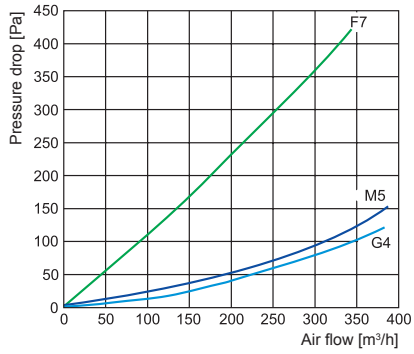

FDI 125

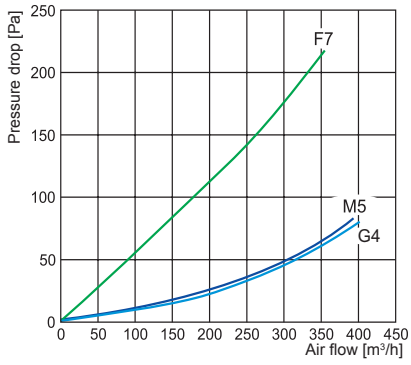

FDI 160

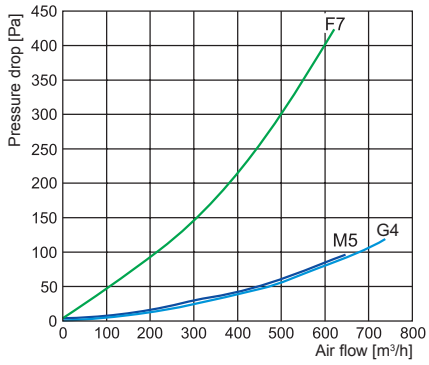

FDI 200

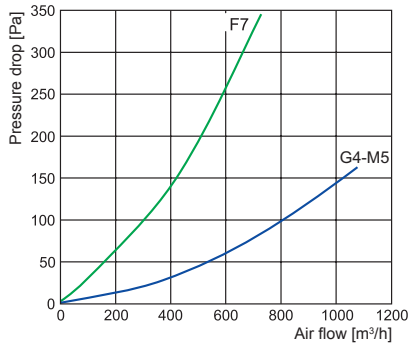

FDI 250

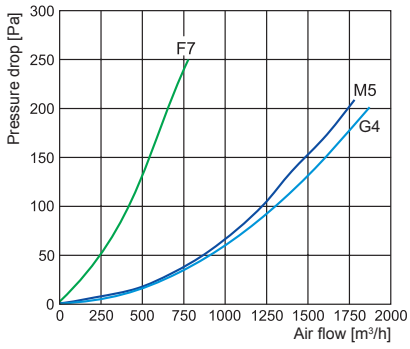

FDI 315

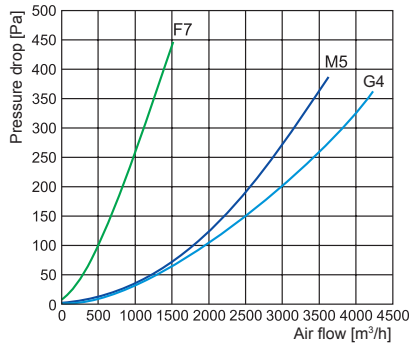

FDI 355

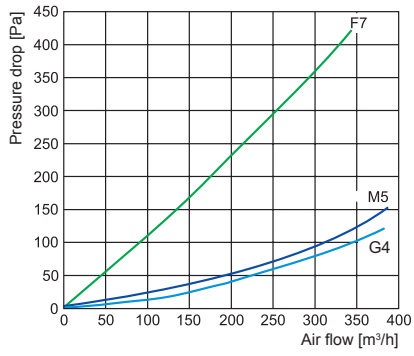

FDI 400

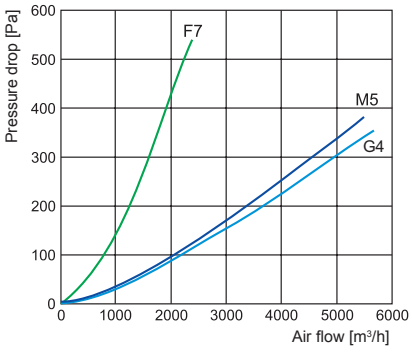

FDI 500

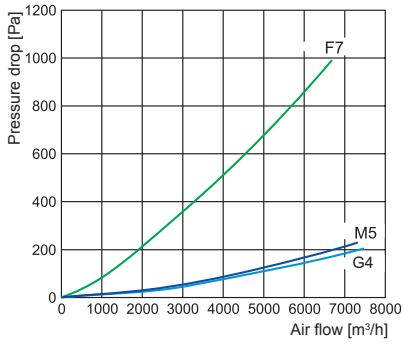

FDI 630

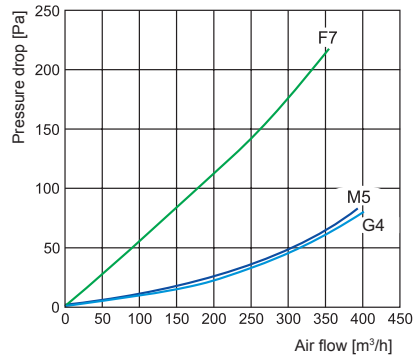

The company reserves the right to make changes of technical data without prior notice

Filter cassette

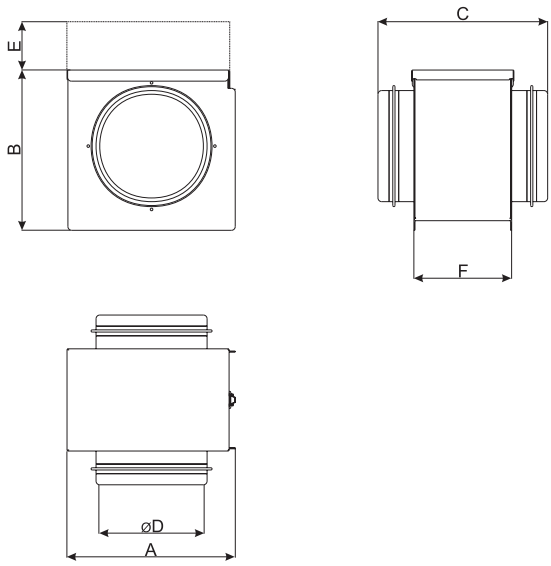

Title	Article No.
FD 100 -G4	GFZFD001
FD 125 -G4	GFZFD002
FD 150 -G4	GFZFD016
FD 160 -G4	GFZFD003
FD 200 -G4	GFZFD004
FD 250 -G4	GFZFD005
FD 315 -G4	GFZFD006
FD 355 -G4	GFZFD022
FD 400 -G4	GFZFD007
FD 500 -G4	GFZFD008
FD 630 -G4	GFZFD009

Filter boxes FD are used to clean supplied air. They are mounted into a system of circular air ducts. Completed with exchangeable FM-type G4 class panel filters. The casing is made of galvanized steel with rubber sealed circular connection. Maintenance cover is attached to the casing using one hinge and is easily removable.

Pressure drop

The diagram shows pressure drop in filter cassette type FD which is equipped with a panel of standard filter G4 class.

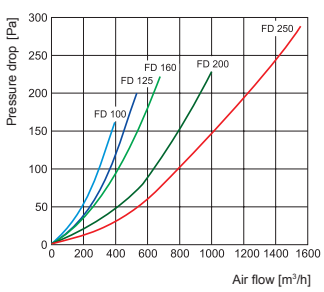

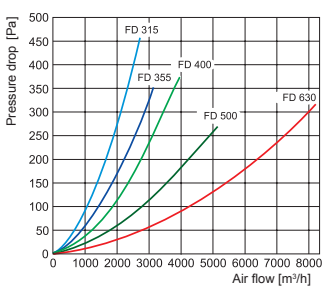

Dimensions

Type	A, [mm]	B, [mm]	C, [mm]	øD, [mm]	E, [mm]	F, [mm]
FD 100	224	216	231	100	216	132
FD 125	224	216	231	125	216	132
FD 160	224	216	215	160	216	132
FD 200	268	256	215	200	256	132
FD 250	318	306	241	250	306	132
FD 315	366	356	241	315	356	132
FD 355	470	460	241	355	460	132
FD 400	470	460	281	400	460	132
FD 500	547	530	244	500	530	95
FD 630	690	670	281	630	670	132

FD has to be installed into duct system in such a way that a certain space (according to dim. E) should be left for opening the door in case of changing a bag filter.

Flat filter

Title	Article No.
FM 100-125-160/G4 (for FD filter box)	GFIFM001
FM 200/G4 (for FD filter box)	GFIFM004
FM 250/G4 (for FD filter box)	GFIFM005
FM 315/G4 (for FD filter box)	GFIFM006
FM 355/G4 (for FD filter box)	GFIFM061
FM 400/G4 (for FD filter box)	GFIFM007
FM 500/G4 (for FD filter box)	GFIFM008
FM 630/G4 (for FD filter box)	GFIFM030

G4 class flat filters FM for air cleaning. They are installed in filter boxes FD, that, in turn, are mounted into the system of round air ducts.

Dimensions

Type	Filter class	Dimensions, [mm]	Application
FM 100	G4	227x200	FD
FM 125	G4	227x200	FD
FM 160	G4	227x200	FD
FM 200	G4	265x240	FD
FM 250	G4	310x290	FD
FM 315	G4	355x340	FD
FM 400	G4	484x444	FD
FM 500	G4	521x513	FD
FM 630	G4	670x684	FD

The company reserves the right to make changes of technical data without prior notice

Pocket filter

Rectangular pocket filters used for air cleaning. Installed in filter boxes. Filtering material can be G4, M5 or F7 class. Frame is made of a galvanized steel, 25 mm width.

Dimensions

Type	Filter class	Pockets, [pcs.]	Application
FMK 100	G4	2	FDI
FMK 125	G4	2	FDI
FMK 160	G4	3	FDI
FMK 200	G4	4	FDI
FMK 250	G4	5	FDI
FMK 315	G4	6	FDI
FMK 400	G4	7	FDI
FMK 500	G4	7	FDI
FMK 630	G4	7	FDI
FMK 100	M5	2	FDI
FMK 125	M5	2	FDI
FMK 160	M5	3	FDI
FMK 200	M5	4	FDI
FMK 250	M5	5	FDI
FMK 315	M5	6	FDI
FMK 400	M5	7	FDI
FMK 500	M5	7	FDI
FMK 630	M5	7	FDI
FMK 100	F7	4	FDI
FMK 125	F7	4	FDI
FMK 160	F7	6	FDI
FMK 200	F7	8	FDI
FMK 250	F7	10	FDI
FMK 315	F7	12	FDI
FMK 400	F7	14	FDI
FMK 500	F7	14	FDI
FMK 630	F7	14	FDI

Dimensions

Type	Filter class	Pockets, [pcs.]	Application
FMK 40-20	G4	4	FDS
FMK 50-25	G4	5	FDS
FMK 50-30	G4	5	FDS
FMK 60-30	G4	6	FDS
FMK 60-35	G4	6	FDS
FMK 70-40	G4	7	FDS
FMK 80-50	G4	8	FDS
FMK 100-50	G4	10	FDS
FMK 40-20	M5	4	FDS
FMK 50-25	M5	5	FDS
FMK 50-30	M5	5	FDS
FMK 60-30	M5	6	FDS
FMK 60-35	M5	6	FDS
FMK 70-40	M5	7	FDS
FMK 80-50	M5	8	FDS
FMK 100-50	M5	10	FDS
FMK 40-20	F7	8	FDS
FMK 50-25	F7	10	FDS
FMK 50-30	F7	10	FDS
FMK 60-30	F7	12	FDS
FMK 60-35	F7	12	FDS
FMK 70-40	F7	14	FDS
FMK 80-50	F7	16	FDS
FMK 100-50	F7	20	FDS

Panel filter

MPL panel filters are G4 or F7 filtration class.
New type principle of fluting and punctuate sticking of pleats ensures low resistance to air flow and a large capacity for dust.
Filter material is made of a synthetic multilayer filter material.

Title	Article No.
MPL 217x208x25 G4	ZFEPF009
MPL 225X190X25 G4	ZFEPF107
MPL 250X168X28 G4	ZFEPF125
MPL 259X151X25 G4	ZFEPF100
MPL 270X187X25 G4	ZFEPF128
MPL 270X121X25 G4	ZFEPF129
MPL 278X151X25 G4	ZFEPF099
MPL 300X217X46 G4	ZFEPF012
MPL 315X151X25 G4	ZFEPF098
MPL 323X230X46 G4	ZFEPF014
MPL 339X195X25 G4	ZFEPF111
MPL 356X151X25 G4	ZFEPF097
MPL 360X217X46 G4	ZFEPF021
MPL 361X149X25 G4	ZFEPF103
MPL 374X195X25 G4	ZFEPF112
MPL 380X195X25 G4	ZFEPF114
MPL 400X151X25 G4	ZFEPF096
MPL 420X195X25 G4	ZFEPF115

Title	
MPL 440X180X25 G4	ZFEPF082
MPL 445X151X25 G4	ZFEPF095
MPL 450X170X46 G4	ZFEPF031
MPL 469X180X25 G4	ZFEPF118
MPL 469X195X25 G4	ZFEPF113
MPL 469X230X25 G4	ZFEPF123
MPL 490X240X25 G4	ZFEPF078
MPL 491X151X25 G4	ZFEPF094
MPL 500X155X25 G4	ZFEPF076
MPL 500X155X46 G4	ZFEPF074
MPL 530X195X25 G4	ZFEPF116
MPL 545X260X46 G4	ZFEPF034
MPL 552X542X46 G4	ZFEPF038
MPL 558X542X46 G4	ZFEPF040
MPL 647X615X90 G4	ZFEPF049
MPL 700X245X25 G4	ZFEPF122
MPL 700X270X25 G4	ZFEPF130
MPL 1000X444X90 G4	ZFEPF002

The company reserves the right to make changes of technical data without prior notice

Rectangular duct silencer

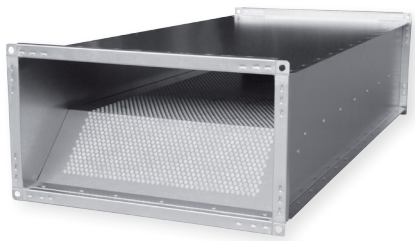

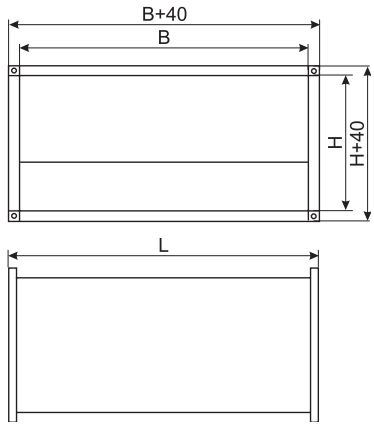

Title	Article No.
SKS 30-15	GSOSKS001
SKS 40-20	GSOSKS002
SKS 50-25	GSOSKS003
SKS 50-30	GSOSKS004
SKS 60-30	GSOSKS005
SKS 60-35	GSOSKS006
SKS 70-40	GSOSKS007
SKS 80-50	GSOSKS008
SKS 100-50	GSOSKS009

Rectangular duct silencers SKS are designed for rectangular duct fans VKS/VKSA and can be mounted into a system of rectangular air ducts. SKS silencers have good sound attenuation characteristics. Several silencers can be mounted into a rectangular air duct system if there is requirement for bigger noise reduction. The casing is made of galvanized steel and inner casing is made of perforated sheet steel. Mineral wool is used for sound insulation.

Pressure drop

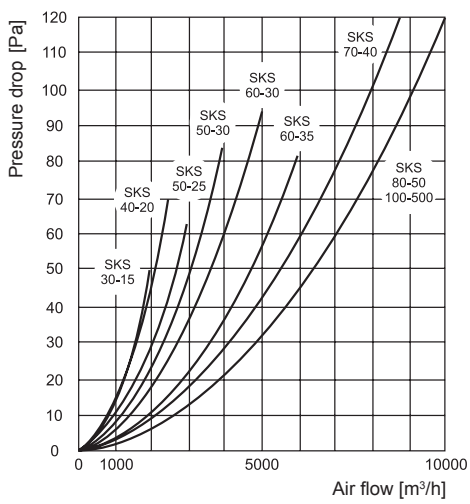

Dimensions

Type	B, [mm]	H, [mm]	L, [mm]	Weight, [kg]
SKS 30-15	300	150	950	10,0
SKS 40-20	400	200	950	13,0
SKS 50-25	500	250	950	17,0
SKS 50-30	500	300	950	19,0
SKS 60-30	600	300	950	21,0
SKS 60-35	600	350	950	23,0
SKS 70-40	700	400	950	27,0
SKS 80-50	800	500	950	29,0
SKS 100-50	1000	500	950	32,0

Attenuation values in frequency bands [dB]

Type	125 Hz	250 Hz	500 Hz	1 kHz	2 kHz	4 kHz	8 kHz
SKS 30-15	7	15	18	25	25	19	19
SKS 40-20	5	9	15	23	16	12	10
SKS 50-25	10	15	25	25	20	15	12
SKS 50-30	8	15	20	31	17	14	11
SKS 60-30	8	15	20	31	17	14	11
SKS 60-35	7	13	17	18	13	10	8
SKS 70-40	7	11	14	14	10	8	6
SKS 80-50	6	10	15	12	10	8	7
SKS 100-500	6	9	15	13	11	8	6

AKS / SAKS

Circular duct silencers

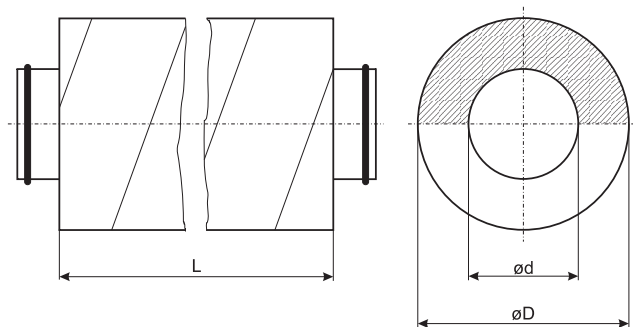

Round duct silencers AKS/SAKS can be mounted into a system of round air ducts. These silencers have good sound attenuation characteristics. Several silencers can be mounted into a circular air duct system if there is requirement for bigger noise reduction. The housing is made of external SPIRO System duct and inner casing is made of perforated sheet steel. Mineral wool is used for sound insulation.
The insulating part in SAKS silencers is thicker than in AKS silencers.

ACCESSORIES

Dimensions

Type	L, [mm]	ød, [mm]	øD, [mm]
AKS 100	300; 600; 900	100	200
AKS 125	300; 600; 900; 1000; 1200	125	200
AKS 160	600; 900; 1000; 1200	160	250
AKS 200	600; 900; 1000; 1200	200	315
AKS 250	600; 900; 1000; 1200	250	400
AKS 315	600; 900; 1000; 1200	315	500
AKS 400	900; 1000; 1200	400	630
AKS 500	900; 1000; 1200	500	630
AKS 630	900; 1000; 1200	630	800
AKS 800	900; 1000; 1200	800	1000
SAKS 100	300; 600; 900; 1000; 1200	100	315
SAKS 125	300; 600; 900; 1000; 1200	125	315
SAKS 160	300; 600; 900; 1000; 1200	160	400
SAKS 200	300; 600; 900; 1000; 1200	200	400
SAKS 250	300; 600; 900; 1000; 1200	250	500
SAKS 500	900; 1000; 1200	500	800

The company reserves the right to make changes of technical data without prior notice

Weight

Type	Weight [kg]				
	300 mm	600 mm	900 mm	1000 mm	1200 mm
AKS 100	3,0	4,1	4,7	-	-
AKS 125	3,2	4,5	5,0	5,2	7,7
AKS 160	-	5,8	6,4	7,0	10,0
AKS 200	-	7,0	10,0	11,5	12,0
AKS 250	-	10,3	13,0	14,1	15,0
AKS 315	-	13,10	17,2	21,0	24,0
AKS 400	-	-	22,8	23,0	32,0
AKS 500	-	-	25,64	28,0	29,0
AKS 630	-	-	31,6	33,4	35,0
AKS 800	-	-	41,00	46,1	58,5
SAKS 100	2,1	4,2	6,3	7,0	8,4
SAKS 125	2,2	4,4	6,6	7,3	8,8
SAKS 160	3,3	5,6	9,2	10,2	12,2
SAKS 200	3,6	6,8	10,0	11,0	13,2
SAKS 250	4,1	8,2	12,4	13,8	16,6
SAKS 500	-	-	23,6	26,2	31,4

Attenuation values in frequency bands [dB]

Type	125 Hz	250 Hz	500 Hz	1 kHz	2 kHz	4 kHz	8 kHz
AKS 100/6	8	14	26	34	41	45	25
AKS 100/9	8	15	27	36	42	47	24
AKS 125/6	6	12	22	28	37	38	22
AKS 125/9	9	18	30	40	48	43	24
AKS 160/6	5	10	18	23	33	30	19
AKS 160/9	8	16	27	36	47	37	21
AKS 200/6	4	9	17	22	29	25	18
AKS 200/9	7	13	24	31	44	31	20
AKS 250/6	6	11	21	27	39	25	19
AKS 250/9	8	15	29	34	47	33	17
AKS 315/6	5	9	18	23	32	20	18
AKS 315/9	6	12	22	24	36	26	19
AKS 400/9	5	8	11	23	19	17	15
AKS 500/9	6	8	12	23	18	19	15
AKS 630/9	6	8	10	22	17	15	14
AKS 800/9	4	6	7	16	12	10	11

Actuator for dampers

Title	Article No.
CM230-1-F-L	ZAKP0027
LF 230	ZAKP0039
TF 230	ZAKP0063
LM230A-TP	ZAKP0045
LM24A-TP	ZAKP0049
LM230A-SR-TP	ZAKP0043
NM24A-TP	ZAKP0058
NM230A-TP	ZAKP0055
NM24A-SR-TP	ZAKP0057
NF230A	ZAKP0051
NF24A	ZAKP0053
SF24A	ZAKP0072
SF230A	ZAKP0059
SF24A-SR	ZAKP0060
SM230A-TP	ZAKP0062
SM24A-TP	ZAKP0067
SM24A-SR-TP	ZAKP0068

Actuators for air dampers control in ventilation and air-conditioning systems.

Type	**Area, m²**	**Torque power**, Nm	**Power supply**, VAC	**Control signals**
Actuator LM230A-TP	1	5	AC 100 ... 240 V, 50/60 Hz	2 point (ON/OFF)
Actuator LM24A-TP	1	5	AC 24 V, 50/60 HZ / DC 24 V	2/3 point
Actuator LM24A-SR-TP	1	5	AC 24 V, 50/60 HZ / DC 24 V	Modulating 0-10VDC
Actuator NM24A-TP	2	10	AC 24 V, 50/60 HZ / DC 24 V	2/3 point
Actuator NM230A-TP	2	10	AC 100 ... 240 V, 50/60 Hz	2 point (ON/OFF)
Actuator NM24A-SR-TP	1	10	AC 24 V, 50/60 HZ / DC 24 V	Modulating 0-10VDC
Actuator NF230A	2	10	AC 100 ... 240 V, 50/60 Hz	2 point (ON/OFF) Spring return
Actuator NF24A	2	10	AC 24 V, 50/60 HZ / DC 24 V	2 point (ON/OFF)
Actuator SF24A	4	20	AC 24 V, 50/60 HZ / DC 24 V	2 point (ON/OFF) Spring return
Actuator SF230A	4	20	AC 230 V, 50/60 Hz	2 point (ON/OFF) Spring return
Actuator SF24A-SR	4	20	AC 24 V, 50/60 HZ / DC 24 V	Modulating 0-10VDC Spring return
Actuator SM230A-TP	4	20	AC 100 ... 240 V, 50/60 Hz	2/3 point (ON/OFF)
Actuator SM24A-TP	4	20	AC 24 V, 50/60 HZ / DC 24 V	2/3 point
Actuator SM24A-SR-TP	4	20	AC 24 V, 50/60 HZ / DC 24 V	Modulating 0-10VDC
Actuator CM230-1-F-L	0,4	2	AC 100 ... 240 V, 50/60 Hz	3 point (ON/OFF)
Actuator LF230	0,8	4	AC 230 V, 50/60 Hz	2/3 point Spring return
Actuator TF230	0,5	2,5	AC 230 V, 50/60 Hz	On/OFF

The company reserves the right to make changes of technical data without prior notice

Back draft shutter

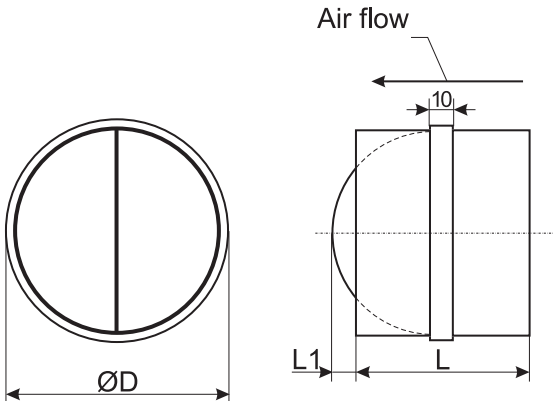

Title	Article No.
RSK 100	GSKRSK001
RSK 125	GSKRSK002
RSK 150	GSKRSK008
RSK 160	GSKRSK003
RSK 200	GSKRSK004
RSK 250	GSKRSK005
RSK 315	GSKRSK006
RSK 355	GSKRSK009
RSK 400	GSKRSK007
RSK 450	GSKRSK011
RSK 500	GSKRSK012

Back draft dampers RSK are used in circular ducting. They allow circulation of air in one direction only. They are mounted into a system of round air ducts.
The damper casing is made of galvanized steel. Blades are made of aluminium, they are spring-loaded. Shutter RSK has to be installed as it is shown in the picture: shaft stands vertically rubber ring is fitted inside.

Dimensions

Type	ØD, [mm]	L, [mm]	L1, [mm]	Weight
RSK 100	100	88	26	0,13 kg
RSK 125	125	88	19	0,17 kg
RSK 150	150	88	31	0,22 kg
RSK 160	160	88	36	0,24 kg
RSK 200	200	88	56	0,29 kg
RSK 250	250	128	61	0,68 kg
RSK 315	315	128	94	0,81 kg
RSK 400	400	198	94	1,68 kg

SK / SKR

Shut-off dampers

SK

SKR

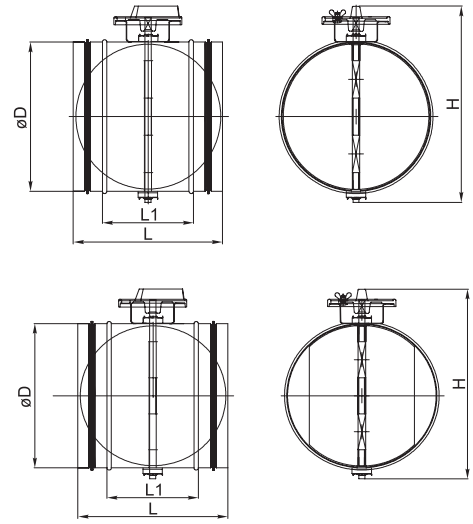

Title	Article No.
SK 100	GSKSK001
SK 125	GSKSK002
SK 160	GSKSK003
SK 200	GSKSK004
SK 250	GSKSK005
SK 315	GSKSK006
SK 355	GSKSK011
SK 400	GSKSK007
SK 450	GSKSK008
SK 500	GSKSK009
SK 630	GSKSK010

Title	Article No.
SKR 100	GSKSKR001
SKR 125	GSKSKR002
SKR 160	GSKSKR003
SKR 200	GSKSKR004
SKR 250	GSKSKR005
SKR 315	GSKSKR006
SKR 355	GSKSKR011
SKR 400	GSKSKR007
SKR 450	GSKSKR008
SKR 500	GSKSKR009
SKR 630	GSKSKR010

Shut-off dampers SK/ SKR are used for shutting off and controlling airflow. They are easily installed in a circular air duct system. Can be mounted in any position. The casing is made of galvanized steel.
Have a rotating, cut-off blade. The blade can be continually adjusted in a 0-90º angle by the handle (a handle is attached using one screw) on the top of damper.
The blade angle of SK/ SKR damper can be read from an embossed scale on the edge of the plate.

Dimensions

Type	øD, [mm]	L1, [mm]	L, [mm]	H, [mm]
SK 100	100	100	200	165
SK 125	125	100	200	190
SK 160	160	100	200	225
SK 200	200	100	200	265
SK 250	250	100	200	315
SK 315	315	140	240	380
SK 355	355	140	240	420
SK 400	400	140	240	470
SK 450	450	140	240	515
SK 500	500	140	240	565
SK 630	630	140	240	695

Dimensions

Type	øD, [mm]	L1, [mm]	L, [mm]	H, [mm]
SKR 100	100	100	200	165
SKR 125	125	100	200	190
SKR 160	160	100	200	225
SKR 200	200	100	200	265
SKR 250	250	100	200	315
SKR 315	315	140	240	380
SKR 355	355	140	240	420
SKR 400	400	140	240	470
SKR 450	450	140	240	515
SKR 500	500	140	240	565
SKR 630	630	140	240	695

The company reserves the right to make changes of technical data without prior notice

Shut-off dampers

SKG

SKM

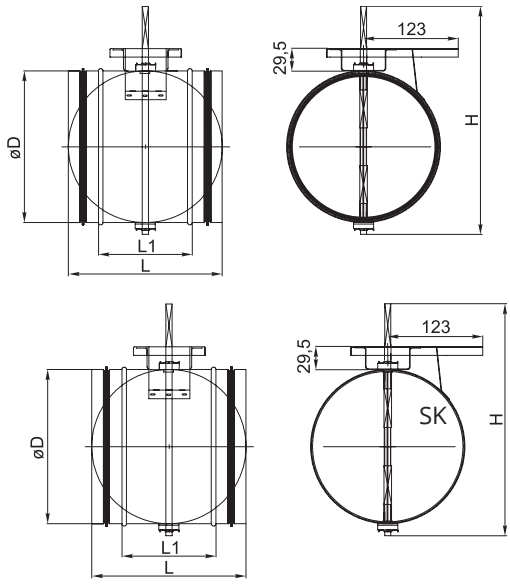

Title	Article No.
SKG 100	GSKSKG001
SKG 125	GSKSKG002
SKG 160	GSKSKG003
SKG 200	GSKSKG004
SKG 250	GSKSKG005
SKG 315	GSKSKG006
SKG 355	GSKSKG007
SKG 400	GSKSKG008
SKG 450	GSKSKG009
SKG 500	GSKSKG010
SKG 630	GSKSKG011

Title	Article No.
SKM 100	GSKSKM001
SKM 125	GSKSKM002
SKM 160	GSKSKM003
SKM 200	GSKSKM004
SKM 250	GSKSKM005
SKM 315	GSKSKM006
SKM 355	GSKSKM022
SKM 400	GSKSKM007
SKM 450	GSKSKM008
SKM 500	GSKSKM009
SKM 630	GSKSKM010

Shut-off dampers SKG/SKM are used for shutting off and controlling airflow. They are easily installed in a circular air duct system. Can be mounted in any position. The casing is made of galvanized steel.
Have a rotating, cut-off blade. The blade can be continually adjusted in a 0-90º angle by a motor on the top of damper. The blade of SKG dampers has rubber seal that tightens the inside of the damper when it's in closed position.
SKG/SKM shut-off damper is controlled by a motor which is supplied separately.

Dimensions

Type	øD, [mm]	L1, [mm]	L, [mm]	H, [mm]
SKG 100	100	100	200	165
SKG 125	125	100	200	190
SKG 160	160	100	200	225
SKG 200	200	100	200	265
SKG 250	250	100	200	315
SKG 315	315	140	240	380
SKG 355	355	140	240	420
SKG 400	400	140	240	470
SKG 450	450	140	240	515
SKG 500	500	140	240	565
SKG 630	630	140	240	695

Type	øD, [mm]	L1, [mm]	L, [mm]	H, [mm]
SKM 100	100	100	200	230
SKM 125	125	100	200	255
SKM 160	160	100	200	290
SKM 200	200	100	200	330
SKM 250	250	100	200	380
SKM 315	315	140	240	445
SKM 355	355	140	240	485
SKM 400	400	140	240	535
SKM 450	450	140	240	580
SKM 500	500	140	240	630
SKM 630	630	140	240	760

Dampers for rectangular ducts

SSK - damper without separating profile

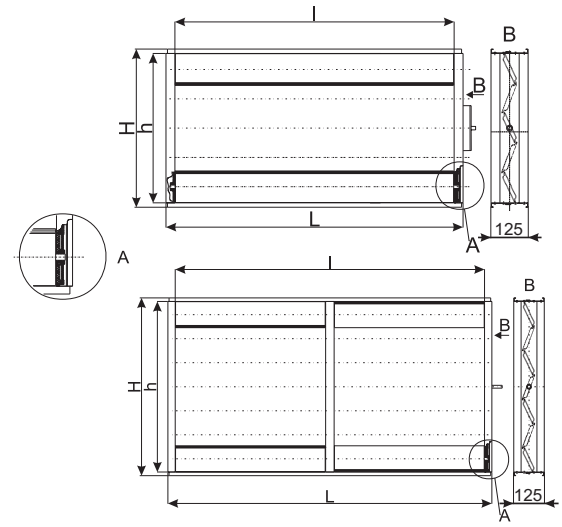

SSK dampers are used for closing airflow. The dampers are made of aluminium profile with sealing rubber gaskets. Palm driving gear is made of glass-fibre material. Silicon sealing strip provides proper tightness.
Dampers are suitable to be used in the temperature ranges from -40º to +80ºC.
The flange system of these dampers is the same as in the rectangular air ducts and fans, therefore mounting operations are simple.

Dimensions

Size range of manufactured SSK dampers varies from 100mm (H_{min}-100mm, L_{min}-100mm) to 3000mm (H_{max}-3000mm, L_{max}-3000mm).
If dimension L bigger than 1000mm, dampers SSK are produced with separating plate.

Calculation of required size:
$H=H_n+40$
$L=L_n+40$

h=H-30
l=L-60

H - height of damper
L - width of damper
h - inner height of damper
l - inner width of damper
H_n - nominal height of damper
L_n - nominal width of damper

Specification	SSK L-H
Damper for rectangular ducts	**SSK**
Width [mm]	**L**
Height [mm]	**H**

Pressure drop

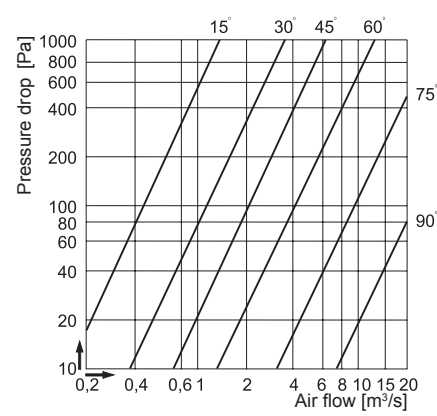

The company reserves the right to make changes of technical data without prior notice

Guard grilles

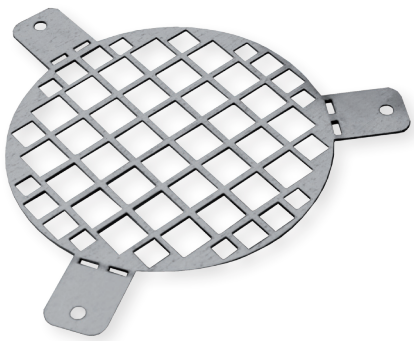

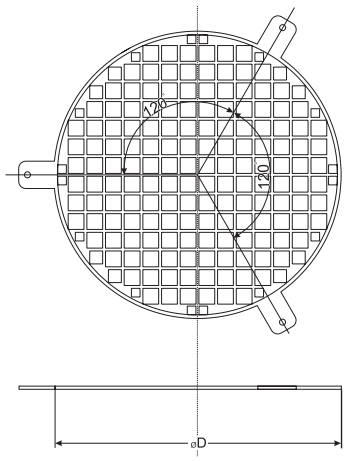

Title	Article No.
AGO 100	GGRAGO001
AGO 125	GGRAGO002
AGO 160	GGRAGO003
AGO 200	GGRAGO004
AGO 250	GGRAGO005
AGO 315	GGRAGO006
AGO 355	GGRAGO014
AGO 400	GGRAGO007
AGO 450	GGRAGO015
AGO 500	GGRAGO008
AGO 560	GGRAGO017
AGO 630	GGRAGO009
AGO 710	GGRAG0014
AGO 800	GGRAGO010
AGO 900	GGRAGO011
AGO 1000	GGRAGO012

Used for the protection of round duct fans and ventilation systems from extraneous objects. Made of galvanized steel. Attached using screws.

Dimensions

Type	ØD, [mm]
AGO 100	100
AGO 125	125
AGO 160	160
AGO 200	200
AGO 250	250
AGO 315	315
AGO 355	355
AGO 400	400
AGO 450	450
AGO 500	500
AGO 560	560
AGO 630	630
AGO 710	710
AGO 800	800
AGO 900	900
AGO 1000	1000

Duct grilles

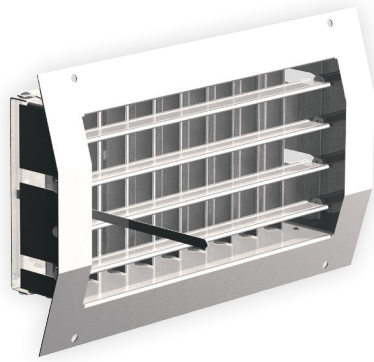

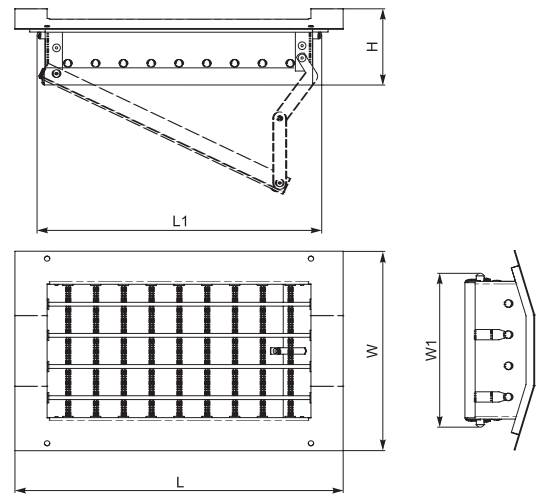

Title	Article No.
GAO 225-85	GGRGAO0032
GAO 225-125	GGRGAO0291
GAO 225-150	GGRGAO0290
GAO 325-85	GGRGAO0017
GAO 325-125	GGRGAO0001
GAO 325-150	GGRGAO0053
GAO 325-225	GGRGAO0033
GAO 425-85	GGRGAO0003
GAO 425-125	GGRGAO0002
GAO 425-150	GGRGAO0005
GAO 425-225	GGRGAO0008
GAO 525-85	GGRGAO0006
GAO 525-125	GGRGAO0030
GAO 525-150	GGRGAO0031
GAO 525-225	GGRGAO0007

GAO 625-85	GGRGAO0018
GAO 625-125	GGRGAO0019
GAO 625-150	GGRGAO0004
GAO 625-225	GGRGAO0027
GAO 825-85	GGRGAO0022
GAO 825-125	GGRGAO0009
GAO 825-150	GGRGAO0020
GAO 825-225	GGRGAO0011
GAO 1025-85	GGRGAO0024
GAO 1025-125	GGRGAO0029
GAO 1025-150	GGRGAO0025
GAO 1025-225	GGRGAO0028
GAO 1225-85	GGRGAO0023
GAO 1225-125	GGRGAO0010
GAO 1225-150	GGRGAO0026
GAO 1225-225	GGRGAO0021

GAO is a ventilation grille with horizontal and vertical adjustable vanes for direct mounting on circular ducts. It is used for large locations where the circular duct is visible. Fits round ducts ø 160-1200mm. Made of sheet, zinc coated steel. The front is shaped to fit the spiro duct dimension. Air direction can be changed with the adjustable blades.
Possible variant painted RAL7040 (GAOd).

Dimensions

Type	L, [mm]	L1, [mm]	W, [mm]	W1, [mm]	H, [mm]	Duct [mm]
GAO 225x85	245	222	105	72	42	160-250
GAO 325x85	345	322	105	72	42	160-250
GAO 425x85	445	422	105	73	42	160-250
GAO 525x85	545	522	105	72	42	160-250
GAO 625x85	645	622	105	72	42	160-250
GAO 825x85	845	822	105	72	42	160-250
GAO 1025x85	1045	1022	105	72	42	160-250
GAO 1225x85	1245	1222	105	72	42	160-250
GAO 225x125	255	221	155	120	60	315-900
GAO 325x 125	355	321	155	120	60	315-900
GAO 425x125	455	421	155	120	60	315-900
GAO 525x125	555	521	155	120	60	315-900
GAO 625x125	655	621	155	120	60	315-900
GAO 825x125	855	822	155	120	60	315-900
GAO 1025x125	1055	1022	155	120	60	315-900
GAO 1225x125	1250	1222	150	120	60	315-900

Type	L, [mm]	L1, [mm]	W, [mm]	W1, [mm]	H, [mm]	Duct [mm]
GAO 225x150	255	221	180	145	60	400-1000
GAO 325x150	355	321	180	145	60	400-1000
GAO 425x150	455	421	180	145	60	400-1000
GAO 525x150	555	521	180	145	60	400-1000
GAO 625x150	655	621	180	145	60	400-1000
GAO 825x150	855	821	180	145	60	400-1000
GAO 1025x150	1055	1024	180	145	60	400-1000
GAO 1225x150	1255	1222	180	145	60	400-1000
GAO 325x 225	355	321	255	220	65	630-1400
GAO 425x225	455	421	255	220	65	630-1400
GAO 525x225	555	521	255	220	65	630-1400
GAO 625x225	655	621	255	220	65	630-1400
GAO 825x225	855	822	255	220	65	630-1400
GAO 1025x225	1055	1022	255	220	65	630-1400
GAO 1225x225	1250	1222	255	220	65	630-1400

The company reserves the right to make changes of technical data without prior notice

Outdoor grilles

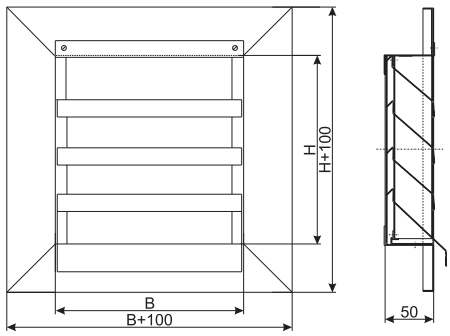

Outdoor grills LGd can be mounted on the external side of walls. They are used for the air supply or extract. The grill is made of galvanized steel and has slanting blades, preventing water from getting inside air ducts. A mesh-work is installed which protects the air duct system from various external objects. The grill is painted RAL 7040. Possible variants: disjointable (LGAd), not painted (LG).

Dimensions

Size range of manufactured LGd (LGAd) grilles varies from 100mm (H_{min}-100mm, B_{min}-200mm) to 2000mm (H_{max}-2000mm, B_{max}-1400mm).

Calculation of required size:
$H=H_n-5$
$B=B_n-5$

H - height
B - width
H_n - nominal height
B_n - nominal width

Specification	LGd, LGAd B H
Outdoor grilles painted (RAL 7040)	**LGd**
Dismountable outdoor grilles painted (RAL 7040)	**LGAd**
Width (mm)	**B**
Height (mm)	**H**
Approx weight 1m²	**13 kg**

Outdoor aluminium grilles

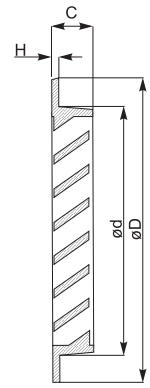

Title	Article No.
ALU 80	GGRALU007
ALU 100	GGRALU001
ALU 125	GGRALU002
ALU 160	GGRALU003
ALU 200	GGRALU004
ALU 250	GGRALU005
ALU 315	GGRALU006

Outdoor ventilation grille is used for covering inlet and exhaust ventilation openings.
ALU is mande of cast aluminium and contains a net, protecting against insects and debris.
.

Dimensions

Type	ØD, [mm]	Ød, [mm]	C, [mm]	H, [mm]	Weight [kg]
ALU 80	101	79	14	2,5	0,13
ALU 100	131	99	19	2,5	0,10
ALU 125	153	124	20	3,0	0,18
ALU 160	189	159	19	4,0	0,30
ALU 200	233	199	20	5,0	0,50
ALU 250	279	249	22	6,0	1,00
ALU 315	353	314	21	6,5	1,50

Pressure drop

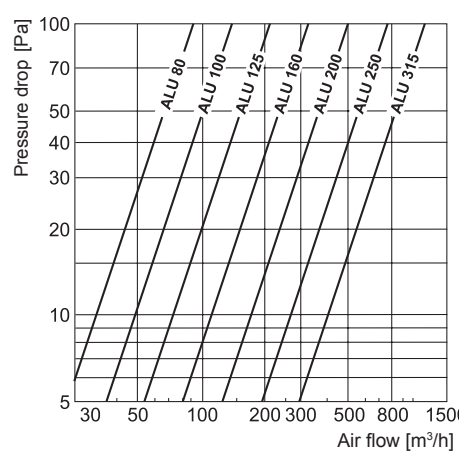

The company reserves the right to make changes of technical data without prior notice

Exhaust air valve

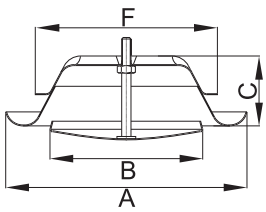

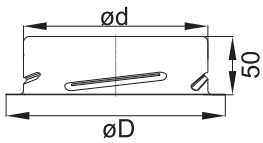

Title	Article No.
DVS 100	GDIDVS001
DVS 125	GDIDVS002
DVS 160	GDIDVS003
DVS 200	GDIDVS004

Air exhaust valves DVS are used in ventilation systems with low pressure drops. Capacity of the valves is 3-130 l/s. Characterized by low noise level. The housing is made of steel sheet. The air valves are painted in standard white color (RAL 9016) which gives a shiny surface to them. Air exhaust valves DVS are provided with a ZR ring.

Pressure drop

DVS 100

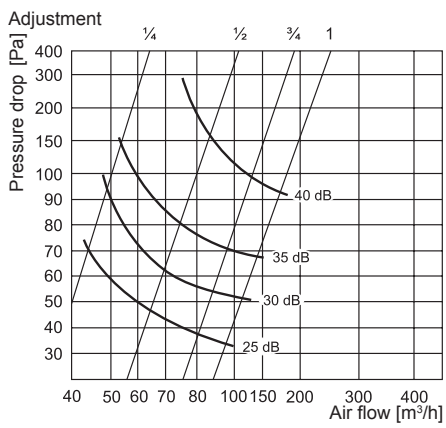

DVS 125

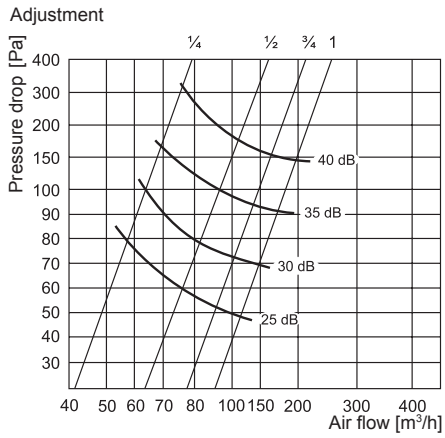

DVS 160

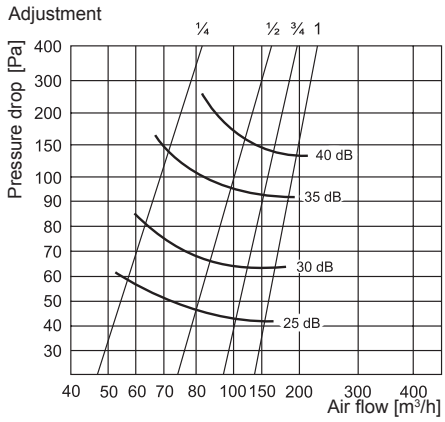

DVS 200

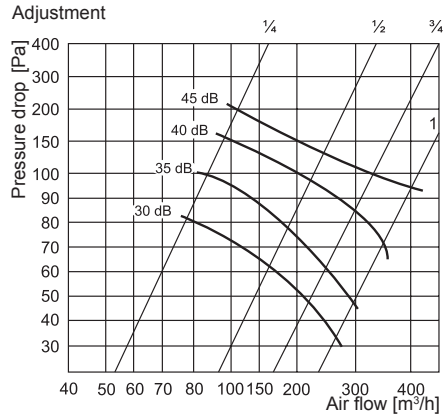

Dimensions

Type	ØA, [mm]	B, [mm]	C, [mm]	F, [mm]	Ød, [mm]	ØD, [mm]
DVS 100	136	78	44	96	98,5	129
DVS 125	164	100	55	122	124	154
DVS 160	209	131	60	157	159	189
DVS 200	248,5	158	62	198	199	229

P-DVS

Supply air valve

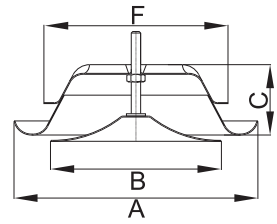

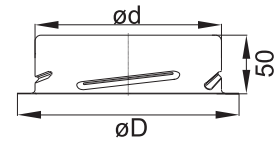

Title	Article No.
P-DVS 100	GDIP-DVS001
P-DVS 125	GDIP-DVS002
P-DVS 160	GDIP-DVS003
P-DVS 200	GDIP-DVS004

Air supply valves DVS are used in ventilation systems with low pressure drops. Capacity of the valves is 3-130 l/s. Characterized by low noise level. The housing is made of steel sheet. The air valves are painted in standard white color (RAL 9016) which gives a shiny surface to them. Air supply valves DVS are provided with a ZR ring.

ACCESSORIES

Pressure drop

P-DVS 100

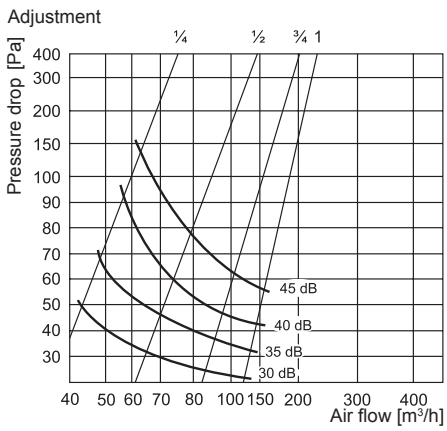

P-DVS 125

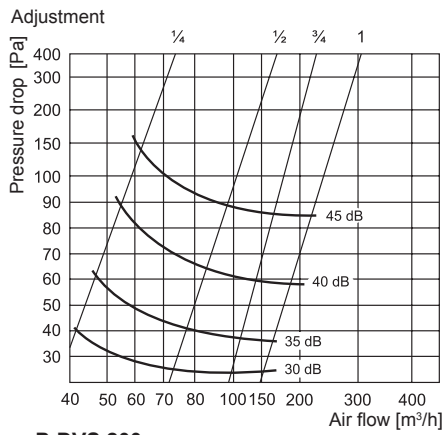

P-DVS 160

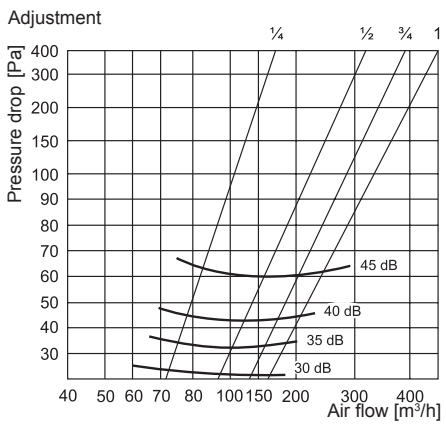

P-DVS 200

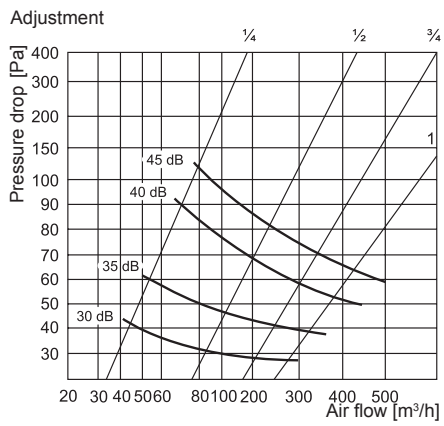

Dimensions

Type	ØA, [mm]	B, [mm]	C, [mm]	F, [mm]	Ød, [mm]	ØD, [mm]
P-DVS 100	136	92	44	96	98,5	129
P-DVS 125	164	111	55	122	124	154
P-DVS 160	209	145	604	157	159	189
P-DVS 200	248,5	192	62	198	199	229

The company reserves the right to make changes of technical data without prior notice

Perforated ceiling diffusers

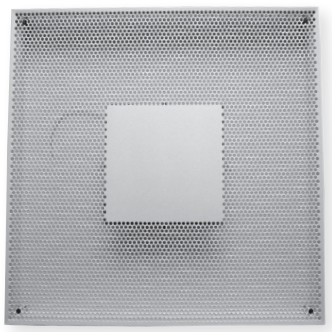

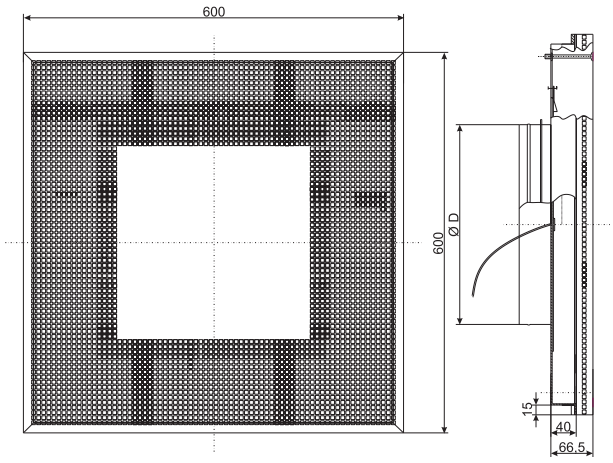

Title	Article No.
DSA 100	GDIDSA001
DSA 125	GDIDSA002
DSA 160	GDIDSA003
DSA 200	GDIDSA004
DSA 250	GDIDSA005
DSA 315	GDIDSA006
DSA 400	GDIDSA007

Diffusers DSA are used for air supply or extract. Ceiling diffusers are produced from round perforated plate, painted in white color using the powder method. Are suitable for constant or variable air flow. Can be mounted directly into suspended ceiling. The flange-adapter of diffusers DSA is round and has a sealing rubber. Diffusers are connected to the ventilation system using connection box DPD. Diffuser consists of two parts: the backing box and perforated plate. Diffusers are painted in standard white color (RAL 9016).

Dimensions

Type	ØD, [mm]
DSA 100	100
DSA 125	125
DSA 160	160
DSA 200	200
DSA 250	250
DSA 315	315
DSA 400	400

Pressure drop

DSA 100

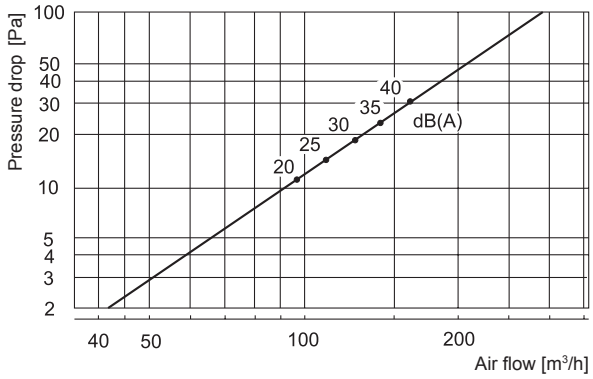

DSA 125

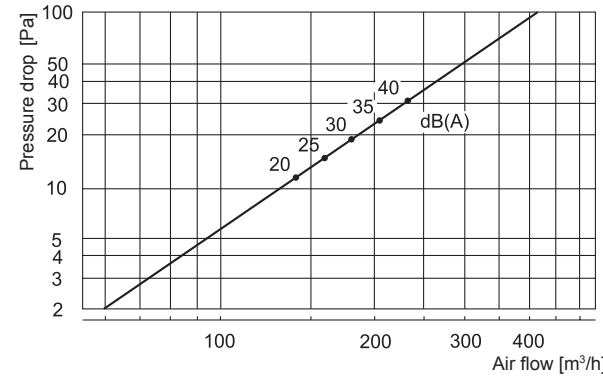

DSA 160

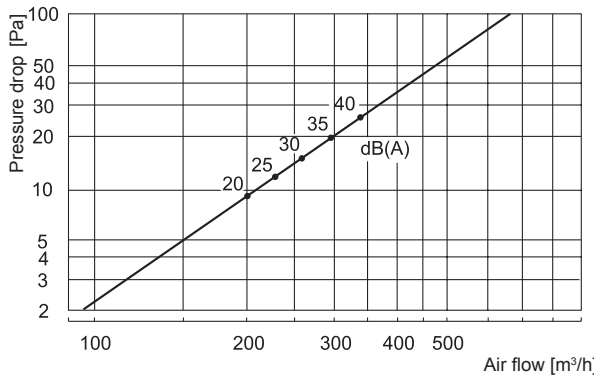

DSA 200

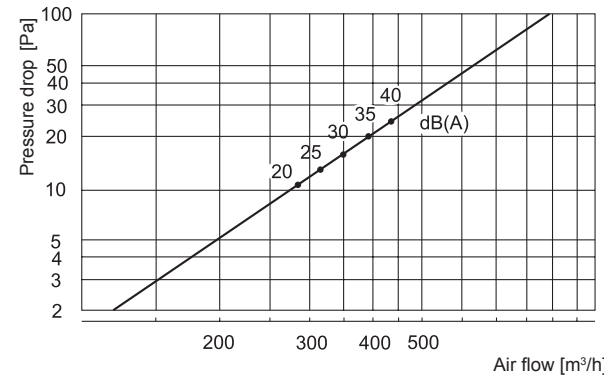

DSA 250

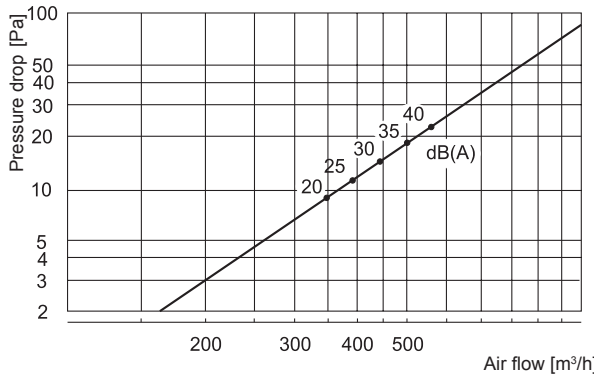

DSA 315

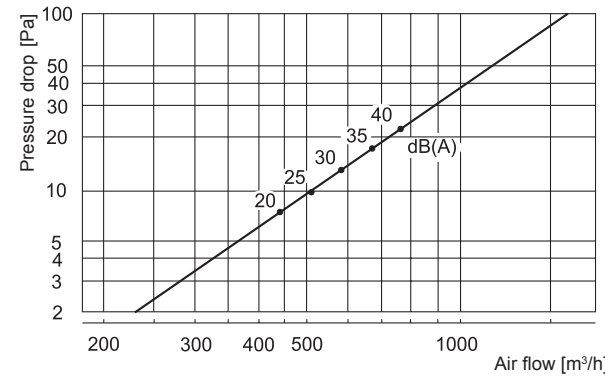

DSA 400

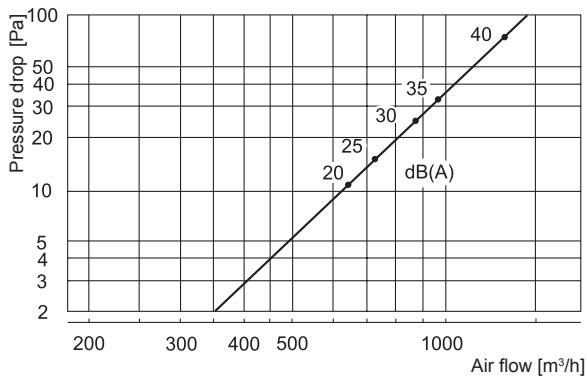

The company reserves the right to make changes of technical data without prior notice

Plenum box

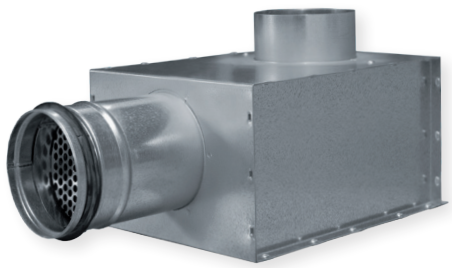

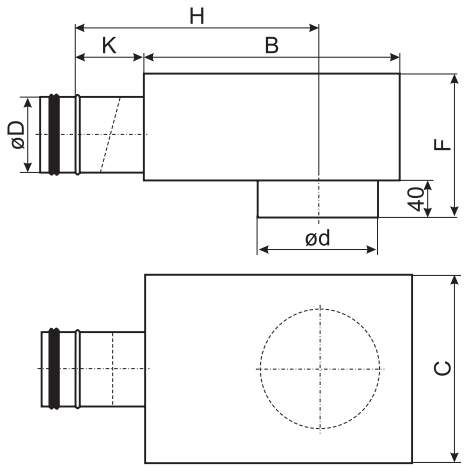

Title	Article No.
DPD 100-100	GDIDPD020
DPD 100-125	GDIDPD016
DPD 125-125	GDIDPD003
DPD 125-160	GDIDPD004
DPD 125-200	GDIDPD005
DPD 160-160	GDIDPD006
DPD 160-200	GDIDPD007
DPD 160-250	GDIDPD008
DPD 160-315	GDIDPD009
DPD 200-250	GDIDPD010
DPD 200-315	GDIDPD011
DPD 250-250	GDIDPD012
DPD 250-315	GDIDPD013
DPD 315-315	GDIDPD014
DPD 315-400	GDIDPD015

Plenum box DPD is made of galvanized steel. It includes commissioning damper and acoustic damping material with reinforced surface layer.
Plenum box DPD is used for the mounting of diffusers.

Dimensions

Type	ØD, [mm]	Ød, [mm]	K, [mm]	B, [mm]	H, [mm]	F, [mm]	C, [mm]
DPD 100-100	100	100	85	290	277	180	217
DPD 100-125	100	125	80	304	277	180	217
DPD 125-125	125	125	80	350	320	204	252
DPD 125-160	125	160	80	370	320	204	252
DPD 125-200	125	200	80	447	382	204	288
DPD 160-160	160	160	100	411	382	239	288
DPD 160-200	160	200	100	447	402	239	288
DPD 160-250	160	250	100	520	455	239	339
DPD 160-315	160	315	100	622	517	239	402
DPD 200-250	200	250	125	520	477	281	332
DPD 200-315	200	315	145	647	587	340	402
DPD 250-250	250	250	145	505	477	340	332
DPD 250-315	250	315	145	647	587	340	402
DPD 315-315	315	315	180	790	722	400	488
DPD 315-400	315	400	180	790	722	400	488

Mounting clamps for circular ducts

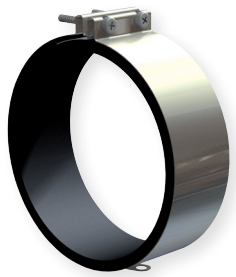

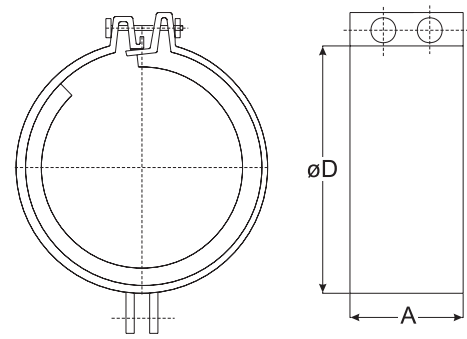

Title	Article No.
AP 100	GAPAP001
AP 125	GAPAP002
AP 150	GAPAP003
AP 160	GAPAP004
AP 200	GAPAP005
AP 250	GAPAP006
AP 315	GAPAP007
AP 355	GAPAP008
AP 400	GAPAP009
AP 450	GAPAP010
AP 500	GAPAP011
AP 560	GAPAP015
AP 630	GAPAP012
AP 710	GAPAP016
AP 800	GAPAP013

Clamps AP are used for the mounting of various elements of ventilation and air conditioning systems. They minimize vibrations and ensure tight fit of various parts of a system. Made of galvanized steel.

ACCESSORIES

Dimensions

Type	øD, [mm]	A, [mm]	Weight, [kg]
AP 100	100	60	0,12
AP 125	125	60	0,15
AP 150	150	60	0,18
AP 160	160	60	0,20
AP 200	200	60	0,22
AP 250	250	60	0,25
AP 315	315	60	0,28
AP 355	355	60	0,30
AP 400	400	60	0,32
AP 450	450	60	0,35
AP 500	500	60	0,37
AP 560	560	60	0,4
AP 630	630	60	0,44
AP 710	710	60	0,48
AP 800	800	60	0,52

The company reserves the right to make changes of technical data without prior notice

Flexible connection

LJ/PG

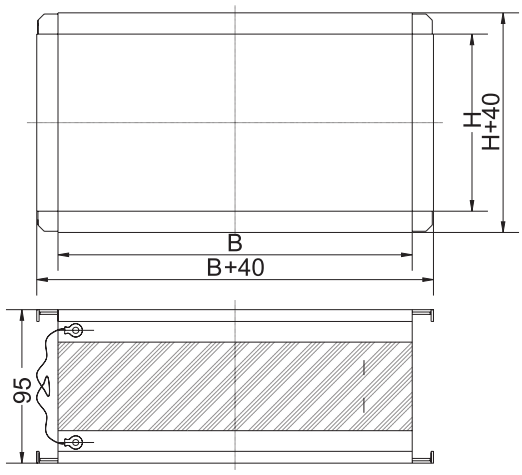

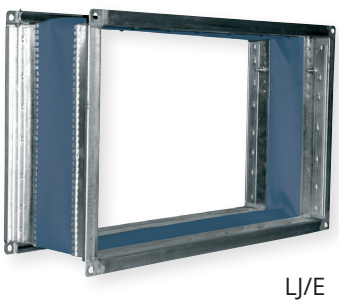

LJ/E

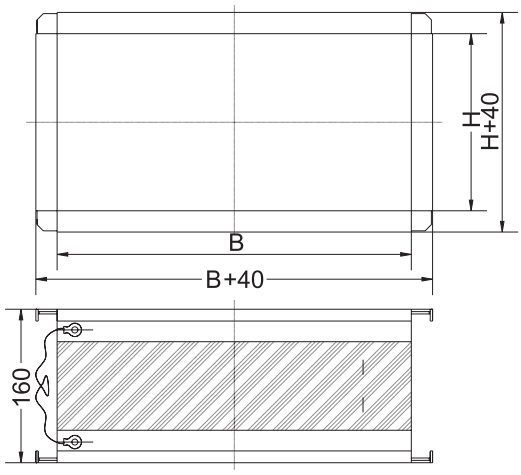

Title	Article No.
LJ-PG 30-15	GLJLJ/PG001
LJ-PG 40-20	GLJLJ/PG002
LJ-PG 42-42	GLJLJ/PG053
LJ-PG 50-25	GLJLJ/PG004
LJ-PG 50-30	GLJLJ/PG005
LJ-PG 59-59	GLJLJ/PG054
LJ-PG 60-30	GLJLJ/PG007
LJ-PG 60-35	GLJLJ/PG008
LJ-PG 70-40	GLJLJ/PG009
LJ-PG 72-72	GLJLJ/PG018
LJ-PG 80-50	GLJLJ/PG010
LJ-PG 80-80	GLJLJ/PG076
LJ-PG 92-92	GLJLJ/PG056
LJ-PG 100-50	GLJLJ/PG011

Title	Article No.
LJ-E 30-15	GLJLJ/E001
LJ-E 40-20	GLJLJ/E002
LJ-E 50-25	GLJLJ/E004
LJ-E 50-30	GLJLJ/E005
LJ-E 60-30	GLJLJ/E007
LJ-E 60-35	GLJLJ/E008
LJ-E 70-40	GLJLJ/E009
LJ-E 80-50	GLJLJ/E010
LJ-E 100-50	GLJLJ/E011

Flexible connection LJ/PG and LJ/E is made from galvanised steel sheet and neoprene fabric.

Dimensions

Type	B, [mm]	H, [mm]	Weight, [kg]
LJ/PG 30x15	300	150	0,3
LJ/PG 40x20	400	200	0,4
LJ/PG 50x25	500	250	0,5
LJ/PG 50x30	500	300	0,7
LJ/PG 60x30	600	300	1,0
LJ/PG 60x35	600	350	1,2
LJ/PG 70x40	700	400	1,4
LJ/PG 80x50	800	500	1,7
LJ/PG 100x50	1000	500	2,0

Dimensions

Type	B, [mm]	H, [mm]	Weight, [kg]
LJ/E 30x15	300	150	1,5
LJ/E 40x20	400	200	1,8
LJ/E 50x25	500	250	2,2
LJ/E 50x30	500	300	2,4
LJ/E 60x30	600	300	2,7
LJ/E 60x35	600	350	2,8
LJ/E 70x40	700	400	3,0
LJ/E 80x50	800	500	3,1
LJ/E 100x50	1000	500	3,3

Flange-adapter

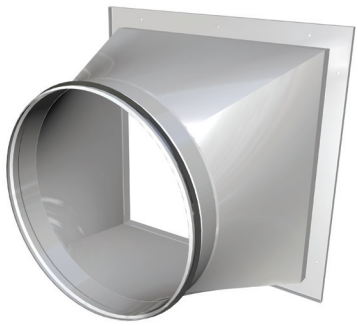

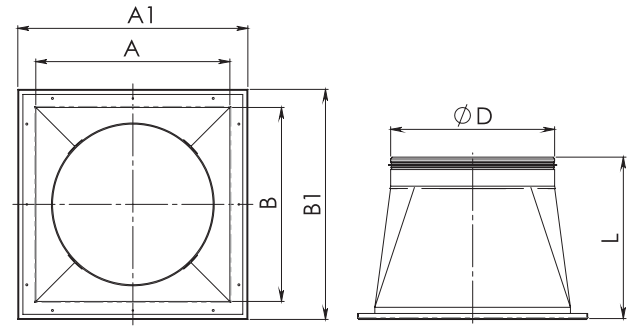

Title	Article No.
PR 420X420-355	GSFKUB169_037
PR 590X590-400	GSFKUB169_038
PR 590X590-450	GSFKUB169_039
PR 590X590-500	GSFKUB169_040
PR 695X695-560	GSFKUB169_041
PR 695X695X630	GSFKUB169_042
PR 790X790-630	GSFKUB169_044
PR 920X920-710	GSFKUB169_043

Flange-adapters PR are used to connect rectangular fans KUB to round air ducts. Made of galvanized steel.

Dimensions

Type	A, [mm]	A1, [mm]	B, [mm]	B1, [mm]	L, [mm]	ØD, [mm]
PR 420x420-355	420	498	420	498	350±5	355
PR 590x590-400	590	668	590	668	350±5	400
PR 590x590-450	590	668	590	668	350±5	450
PR 590x590-500	590	668	590	668	350±5	500
PR 695x695-560	695	796	695	796	350±5	560
PR 695x695-630	695	796	695	796	350±5	630
PR 790x790-630	790	866	790	866	400±5	630
PR 920x920-710	920	996	920	996	400±5	710

The company reserves the right to make changes of technical data without prior notice

Flange-adapter

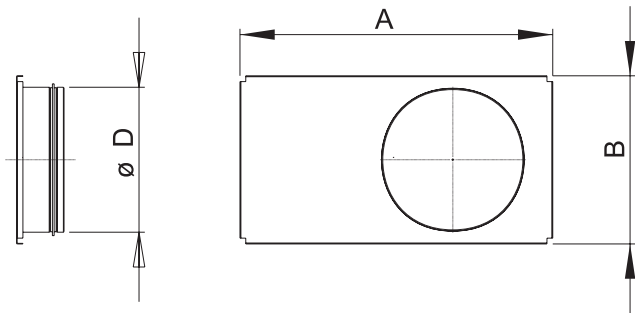

Title	Article No.
VKF 400-200 200	GVEVFKC008
VKF 500-250 250	GVEVFKC001
VKF 500-300 315	GVEVFKC002
VKF 600-300 315	GVEVFKC003
VKF 600-350 315	GVEVFKC004
VKF 700-400 400	GVEVFKC005
VKF 800-500 500	GVEVFKC006
VKF 1000-500 500	GVEVFKC006

Flange-adapters VKF are used to connect rectangular fans VKS, VKSA to round air ducts. Made of galvanized steel.

Dimensions

Type	A, [mm]	B, [mm]	øD, [mm]	Weight, [kg]
VKF 400x200	440	240	200	0,9
VKF 500x250	540	290	250	1,1
VKF 600x300	640	340	315	1,3
VKF 600x350	640	390	355	1,6
VKF 700x400	740	440	400	1,9
VKF 800x500	840	540	500	2,2
VKF 1000x500	1040	540	500	2,5

Mounting clamps for circular ducts

Title	Article No.
NPU 100	GFDNPUC001
NPU 125	GFDNPUC002
NPU 140	GFDNPUC030
NPU 150	GFDNPUC028
NPU 160	GFDNPUC003
NPU 180	GFDNPUC031
NPU 200	GFDNPUC004
NPU 250	GFDNPUC005
NPU 315	GFDNPUC006
NPU 400	GFDNPUC007
NPU 450	GFDNPUC029
NPU 500	GFDNPUC008
NPU 630	GFDNPUC009
NPU 710	GFDNPU0710
NPU 800	GFDNPUC010
NPU 1000	GFDNPUC011
NPU 1250	GFDNPUC012

Couplings NPU with sealing rubber.

Dimensions

Type	øD, [mm]	L, [mm]	Weight, [kg]
NPU 100	100	10	0,1
NPU 125	125	10	0,2
NPU 140	140	10	0,2
NPU 150	150	10	0,2
NPU 160	160	10	0,2
NPU 180	180	10	0,3
NPU 200	200	10	0,3
NPU 250	250	10	0,3
NPU 315	315	10	0,4
NPU 400	400	10	0,8
NPU 450	450	10	0,9
NPU 500	500	10	1,0
NPU 630	630	10	1,3
NPU 710	710	10	2,1
NPU 800	800	10	2,7
NPU 1000	1000	10	3,4
NPU 1250	1250	10	4,2

The company reserves the right to make changes of technical data without prior notice

Flexible connection

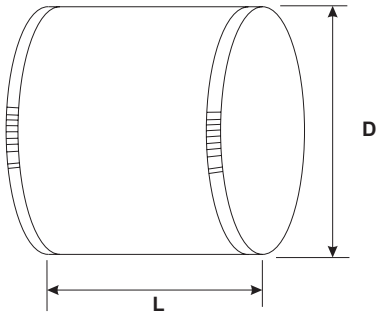

Title	Article No.
RC-MAN-PU -200	ZPDLJ001
RC-MAN-PU -250	ZPDLJ002
RC-MAN-PU - 315	ZPDLJ003
RC-MAN-PU - 400	ZPDLJ004

Flexible connection suitable for high temperature (up to 400 °C) polluted gases.
Construction: fiberglass fabric with polyurethane coating on both sides, circular straight sleeves, pre-inserted stainless steel bands.
Recommended for kitchen exhaust systems with kitchen fans.

Dimensions

Type	ØD, [mm]	L, [mm]
RC-MAN-PU -200	200	160
RC-MAN-PU -250	250	160
RC-MAN-PU - 315	315	160
RC-MAN-PU - 400	400	160

Air outlet

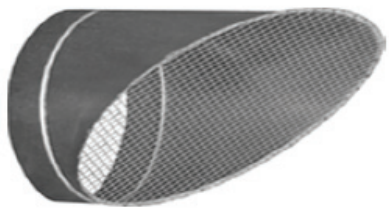

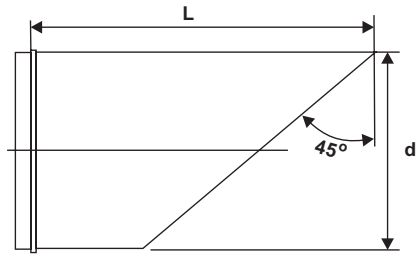

Title	Article No.
AB 100	GFDABC001
AB 120	GFDABC018
AB 125	GFDABC002
AB 140	GFDABC022
AB 150	GFDABC017
AB 160	GFDABC003
AB 180	GFDABC016
AB 200	GFDABC004
AB 225	GFDABC023
AB 250	GFDABC005
AB 280	GFDABC020
AB 300	GFDABC021
AB 315	GFDABC006
AB 350	GFDABC019
AB 400	GFDABC007
AB 500	GFDABC008
AB 630	GFDABC009
AB 800	GFDABC010
AB 1000	GFDABC011
AB 1250	GFDABC012

Dimensions

Type	ød, [mm]	L, [mm]	Weight, [kg]
AB 100	100	200	0,9
AB 120	120	220	1,2
AB 125	125	225	1,3
AB 140	140	240	1,6
AB 150	150	250	1,8
AB 160	160	260	2,4
AB 180	180	280	2,8
AB 200	200	300	3,7
AB 225	225	325	4,6
AB 250	250	350	5,4
AB 280	280	380	6,8
AB 300	300	400	7,4
AB 315	315	415	8,2
AB 350	350	450	9,6
AB 400	400	500	12,5
AB 500	500	600	22
AB 630	630	730	29,5
AB 800	800	900	57,7
AB 1000	1000	1350	79,6
AB 1250	1250	1350	122

The company reserves the right to make changes of technical data without prior notice

Roof KUB

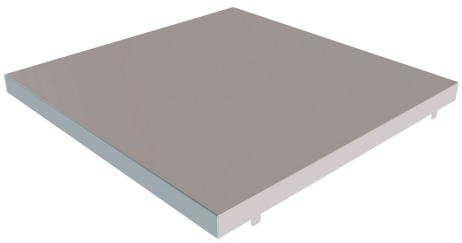

Title	Article No.
Roof for KUB, KUB T120 355	GAGSTOGKUB001
Roof for KUB, KUB T120 400-500	GAGSTOGKUB002
Roof for KUB 560-630, KUB T120 540	GAGSTOGKUB004
Roof for KUB 710	GAGSTOGKUB005
Roof for KUB T120 630	GAGSTOGKUB004

Used for the mounting of acoustically insulated fans KUB, KUB T120.
Made of galvanized steel.